SECTION GI

CONTENTS

PRECAUTIONS 2
Supplemental Restraint System (SRS) "AIR BAG" (Dual Air Bag System) 2
Supplemental Restraint System (SRS) "AIR BAG" (Single Air Bag System) 2
Precautions for NATS V2.0 (For Gasoline Engine Model) 3
General Precautions 3
Precautions for Multiport Fuel Injection System or ECCS Engine 5
Precautions for Three Way Catalyst 5
Engine Oils 5
Precautions for Fuel 6
HOW TO USE THIS MANUAL 7
HOW TO READ WIRING DIAGRAMS 9
Sample/Wiring Diagram — EXAMPL — 9
Description 11
Wiring Diagram Codes (Cell Codes) 17
HOW TO PERFORM EFFICIENT DIAGNOSIS FOR AN ELECTRICAL INCIDENT 18
Work Flow 18
Incident Simulation Tests 19
Circuit Inspection 23
HOW TO FOLLOW FLOW CHART IN TROUBLE DIAGNOSES 29
CONSULT CHECKING SYSTEM 32
Function and System Application 32
Lithium Battery Replacement 32
Checking Equipment 32
IDENTIFICATION INFORMATION 33
Model Variation 33
Identification Number 36
Dimensions 39
Wheels and Tires 39
LIFTING POINTS AND TOW TRUCK TOWING 40
Preparation 40
Board-on Lift 40
Garage Jack and Safety Stand 41
2-pole Lift 42
Tow Truck Towing 43
TIGHTENING TORQUE OF STANDARD BOLTS 44
SAE J1930 TERMINOLOGY LIST 45
SAE J1930 Terminology List 45

Observe the following precautions to ensure safe and proper servicing.

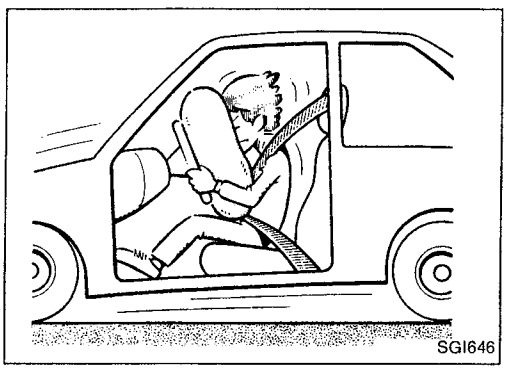

Supplemental Restraint System (SRS) "AIR BAG" (Dual Air Bag System)

The Supplemental Restraint System "Air Bag" used along with a seat belt, helps to reduce the risk or severity of injury to the driver and front passenger in a frontal collision. The Supplemental Restraint System consists of air bag modules (located in the center of the steering wheel and on the instrument panel on the passenger side), a diagnosis sensor unit, warning lamp, wiring harness and spiral cable. Information necessary to service the system safely is included in the **RS section** of this Service Manual.

WARNING:

- **To avoid rendering the SRS inoperative, which could increase the risk of personal injury or death in the event of a collision which would result in air bag inflation, all maintenance must be performed by an authorized NISSAN dealer.**
- **Improper maintenance, including incorrect removal and installation of the SRS, can lead to personal injury caused by unintentional activation of the system.**
- **Do not use electrical test equipment on any circuit related to the SRS unless instructed to in this Service Manual. SRS wiring harnesses are covered with yellow insulation either just before the harness connectors or for the complete harness, for easy identification.**

Supplemental Restraint System (SRS) "AIR BAG" (Single Air Bag System)

The Supplemental Restraint System "Air Bag" and used along with a seat belt, helps to reduce the risk or severity of injury to the driver in a frontal collision. The Supplemental Restraint System consists of an air bag module (located in the center of the steering wheel), a diagnosis sensor unit, warning lamp, wiring harness and spiral cable. Information necessary to service the system safely is included in the **RS section** of this Service Manual.

WARNING:

- **To avoid rendering the SRS inoperative, which could increase the risk of personal injury or death in the event of a collision which would result in air bag inflation, all maintenance must be performed by an authorized NISSAN dealer.**
- **Improper maintenance, including incorrect removal and installation of the SRS, can lead to personal injury caused by unintentional activation of the system.**

- Do not use electrical test equipment on any circuit related to the SRS unless instructed to in this Service Manual.

Precautions for NATS V2.0 (For Gasoline Engine Model)

NATS (Nissan Anti-Theft System)

NATS V2.0 will immobilize the engine if someone tries to start it without the registered key of NATS V2.0.
Both of the originally supplied ignition key IDs have been NATS registered.
The NATS security indicator is located on the instrument panel. The indicator blinks when the ignition switch is in "OFF" or "ACC" position. Therefore, NATS warns outsiders that the vehicle is equipped with the anti-theft system.

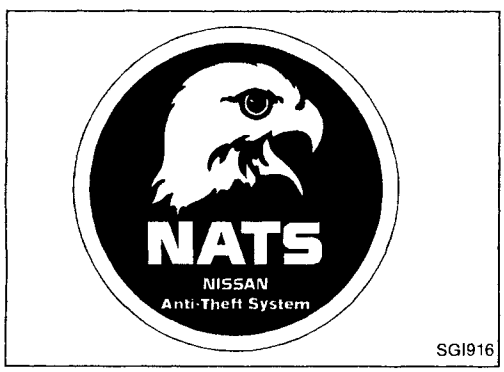

SGI916

- When NATS detects trouble, the malfunction indicator lamp (MIL) blinks.
  This blinking indicates that the anti-theft is not functioning, so prompt service is required.
- When servicing NATS (trouble diagnoses, system initialisation and additional registration of other NATS ignition key IDs), CONSULT hardware and CONSULT NATS software is necessary.
  Regarding the procedures of NATS initialisation and NATS ignition key ID registration, refer to CONSULT operation manual, NATS V2.0.

Therefore, CONSULT NATS software (program card and operation manual) must be kept strictly confidential to maintain the integrity of the anti-theft function.

- When servicing NATS V2.0 (trouble diagnoses, system initialisation and additional registration of other NATS ignition key IDs), it may be necessary to re-register original key identification. Therefore, be sure to receive all keys from vehicle owner.
  A maximum of four key IDs can be registered into NATS.
- When failing to start the engine first-time using the key of NATS V2.0, start as follows.
  (1) Turn ignition key to "OFF".
  (2) Wait approx. 5 seconds.
  (3) Turn ignition key to "START" again while keeping the key apart from any others on key-chain.

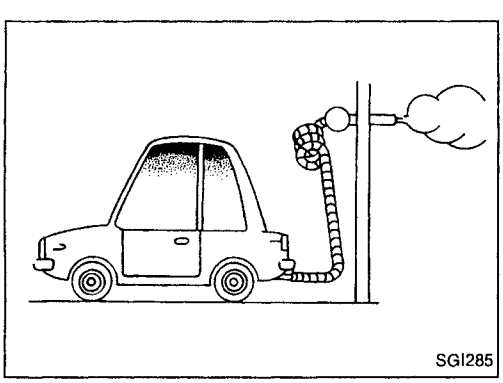
SGI285

General Precautions

- Do not operate the engine for an extended period of time without proper exhaust ventilation.
  Keep the work area well ventilated and free of any flammable materials. Special care should be taken when handling any flammable or poisonous materials, such as gasoline, refrigerant gas, etc. When working in a pit or other enclosed area, be sure to properly ventilate the area before working with hazardous materials.
  Do not smoke while working on the vehicle.

General Precautions (Cont'd)

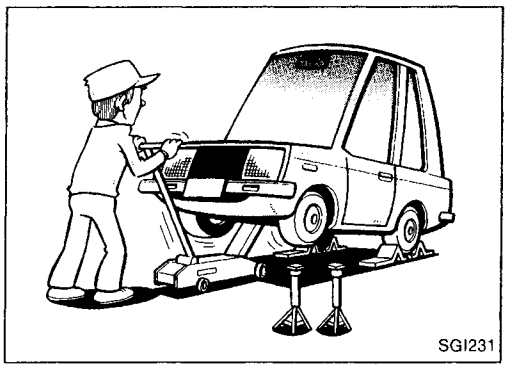
SGI231

- Before jacking up the vehicle, apply wheel chocks or other tire blocks to the wheels to prevent the vehicle from moving. After jacking up the vehicle, support the vehicle weight with safety stands at the points designated for proper lifting before working on the vehicle.
  These operations should be done on a level surface.
- When removing a heavy component such as the engine or transaxle/transmission, be careful not to lose your balance and drop them. Also, do not allow them to strike adjacent parts, especially the brake tubes and master cylinder.

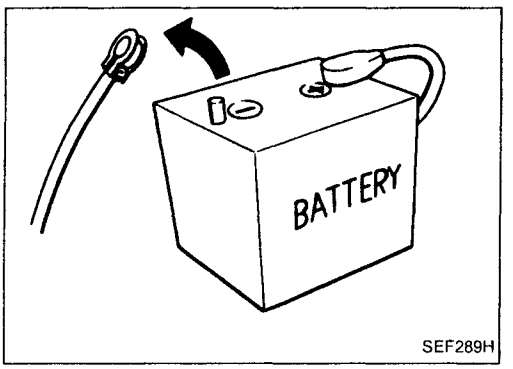

SEF289H

- Before starting repairs which do not require battery power:
  Turn off ignition switch.
  Disconnect the negative battery terminal.

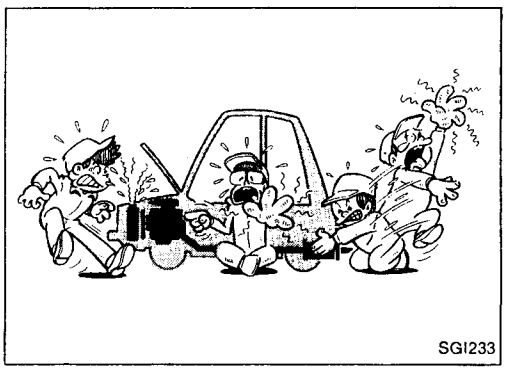
SGI233

- To prevent serious burns:
  Avoid contact with hot metal parts.
  Do not remove the radiator cap when the engine is hot.

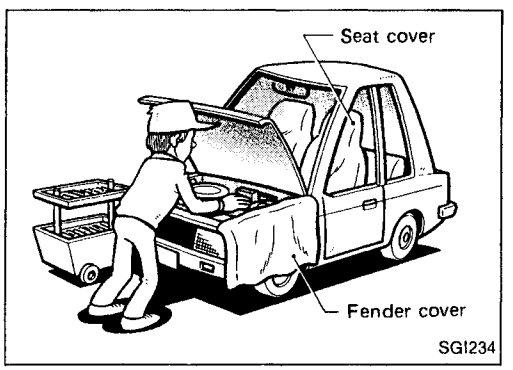

SGI234

- Before servicing the vehicle:
  Protect fenders, upholstery and carpeting with appropriate covers.
  Take caution that keys, buckles or buttons do not scratch paint.

- Clean all disassembled parts in the designated liquid or solvent prior to inspection or assembly.
- Replace oil seals, gaskets, packings, O-rings, locking washers, cotter pins, self-locking nuts, etc. with new ones.
- Replace inner and outer races of tapered roller bearings and needle bearings as a set.
- Arrange the disassembled parts in accordance with their assembled locations and sequence.
- Do not touch the terminals of electrical components which use microcomputers (such as ECMs).
  Static electricity may damage internal electronic components.

General Precautions (Cont'd)

- After disconnecting vacuum or air hoses, attach a tag to indicate the proper connection.
- Use only the fluids and lubricants specified in this manual.
- Use approved bonding agent, sealants or their equivalents when required.
- Use tools and recommended special tools where specified for safe and efficient service repairs.
- When repairing the fuel, oil, water, vacuum or exhaust systems, check all affected lines for leaks.
- Dispose of drained oil or the solvent used for cleaning parts in an appropriate manner.

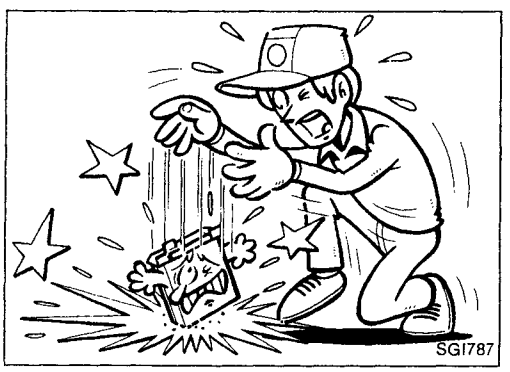

Precautions for Multiport Fuel Injection System or ECCS Engine

- Before connecting or disconnecting any harness connector for the multiport fuel injection system or ECM (ECCS control module):
  Turn ignition switch to "OFF" position.
  Disconnect negative battery terminal.
  Otherwise, there may be damage to ECM.
- Before disconnecting pressurized fuel line from fuel pump to injectors, be sure to release fuel pressure.
- Be careful not to jar components such as ECM and mass air flow sensor.

Precautions for Three Way Catalyst

If a large amount of unburned fuel flows into the catalyst, the catalyst temperature will be excessively high. To prevent this, follow the instructions below:

- Use unleaded gasoline only. Leaded gasoline will seriously damage the three way catalyst.
- When checking for ignition spark or measuring engine compression, make tests quickly and only when necessary.
- Do not run engine when the fuel tank level is low, otherwise the engine may misfire causing damage to the catalyst.

Do not place the vehicle on flammable material. Keep flammable material off the exhaust pipe and the three way catalyst.

Engine Oils

Prolonged and repeated contact with used engine oil may cause skin cancer. Try to avoid direct skin contact with used oil. If skin contact is made, wash thoroughly with soap or hand cleaner as soon as possible.

HEALTH PROTECTION PRECAUTIONS

- Avoid prolonged and repeated contact with oils, particularly used engine oils.
- Wear protective clothing, including impervious gloves where practicable.
- Do not put oily rags in pockets.
- Avoid contaminating clothes, particularly underpants, with oil.
- Heavily soiled clothing and oil-impregnated footwear should not be worn. Overalls must be cleaned regularly.
- First Aid treatment should be obtained immediately for open cuts and wounds.
- Use barrier creams, applying them before each work period, to help the removal of oil from the skin.

Engine Oils (Cont'd)

- Wash with soap and water to ensure all oil is removed (skin cleansers and nail brushes will help). Preparations containing lanolin replace the natural skin oils which have been removed.
- Do not use gasoline, kerosine, diesel fuel, gas oil, thinners or solvents for cleaning skin.
- If skin disorders develop, obtain medical advice without delay.
- Where practicable, degrease components prior to handling.
- Where there is a risk of eye contact, eye protection should be worn, for example, chemical goggles or face shields; in addition an eye wash facility should be provided.

ENVIRONMENTAL PROTECTION PRECAUTIONS

Burning used engine oil in small space heaters or boilers can be recommended only for units of approved design. The heating system must meet the requirements of HM Inspectorate of Pollution for small burners of less than 0.4 MW. If in doubt check with the appropriate local authority and/or manufacturer of the approved appliance.
Dispose of used oil and used oil filters through authorized waste disposal contractors to licensed waste disposal sites, or to the waste oil reclamation trade. If in doubt, contact the local authority for advice on disposal facilities.
It is illegal to pour used oil on to the ground, down sewers or drains, or into water courses.
The regulations concerning the pollution of the environment will vary between regions.

Precautions for Fuel

GASOLINE ENGINE:

For Europe

Unleaded gasoline of at least 95 octane (RON)
CAUTION:
Do not use leaded gasoline. Using leaded gasoline will damage the catalytic converter.

Except Europe

Unleaded gasoline of at least 91 octane (RON)

DIESEL ENGINE*:

Diesel fuel of at least 50 cetane

* If two types of diesel fuel are available, use summer or winter fuel properly according to the following temperature conditions.

- Above –7°C (20°F) ... Summer type diesel fuel.
- Below –7°C (20°F) ... Winter type diesel fuel.

CAUTION:

- **Do not use home heating oil, gasoline, or other alternate fuels in your diesel engine. The use of those can cause engine damage.**
- **Do not use summer fuel at temperature below –7°C (20°F). The cold temperatures will cause wax to form in the fuel. As a result, it may prevent the engine from running smoothly.**
- **Do not add gasoline or other alternate fuels to diesel fuel.**

- **ALPHABETICAL INDEX** is provided at the end of this manual so that you can rapidly find the item and page you are searching for.
- **A QUICK REFERENCE INDEX,** a black tab (e.g. BR) is provided on the first page. You can quickly find the first page of each section by mating it to the section's black tab.
- **THE CONTENTS** are listed on the first page of each section.
- **THE TITLE** is indicated on the upper portion of each page and shows the part or system.
- **THE PAGE NUMBER** of each section consists of two letters which designate the particular section and a number (e.g. "BR-5").
- **THE LARGE ILLUSTRATIONS** are exploded views (See below) and contain tightening torques, lubrication points, section number of the **PARTS CATALOG** (e.g. SEC.440) and other information necessary to perform repairs.
  The illustrations should be used in reference to service matters only. When ordering parts, refer to the appropriate **PARTS CATALOG.**

"Example"
SEC. 440

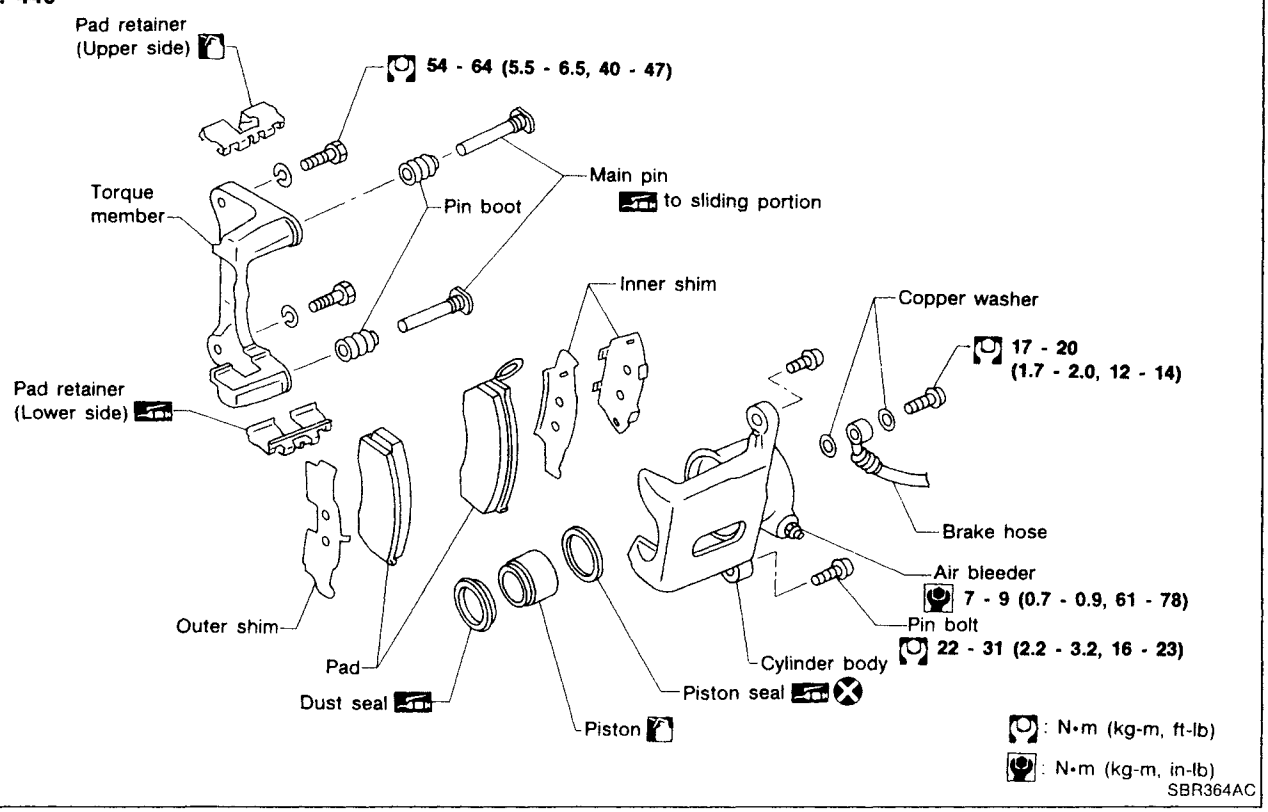

- **THE SMALL ILLUSTRATIONS** show the important steps such as inspection, use of special tools, knacks of work and hidden or tricky steps which are not shown in the previous large illustrations. Assembly, inspection and adjustment procedures for the complicated units such as the automatic transaxle or transmission, etc. are presented in a step-by-step format where necessary.

- The following **SYMBOLS AND ABBREVIATIONS** are used:

,	:	Tightening torque
	:	Should be lubricated with grease. Unless otherwise indicated, use recommended multi-purpose grease.
	:	Should be lubricated with oil.
	:	Sealing point
	:	Checking point
	:	Always replace after every disassembly.
(P)	:	Apply petroleum jelly.
(ATF)	:	Apply ATF.
★	:	Select with proper thickness.
☆	:	Adjustment is required.
SDS	:	Service Data and Specifications
LH, RH	:	Left-Hand, Right-Hand
FR, RR	:	Front, Rear
M/T	:	Manual Transaxle/Transmission
A/T	:	Automatic Transaxle/ Transmission
A/C	:	Air Conditioner
P/S	:	Power Steering
Tool	:	Special Service Tools
SAE	:	Society of Automotive Engineers, Inc.
ATF	:	Automatic Transmission Fluid
D_1	:	Drive range 1st gear
D_2	:	Drive range 2nd gear
D_3	:	Drive range 3rd gear
D_4	:	Drive range 4th gear
OD	:	Overdrive
2_2	:	2nd range 2nd gear
2_1	:	2nd range 1st gear
1_2	:	1st range 2nd gear
1_1	:	1st range 1st gear

- The **UNITS** given in this manual are primarily expressed as the SI UNIT (International System of Unit), and alternatively expressed in the metric system and in the yard/pound system.

  "Example"

  Tightening torque:

  59 - 78 N·m (6.0 - 8.0 kg-m, 43 - 58 ft-lb)
- **TROUBLE DIAGNOSES** are included in sections dealing with complicated components.
- **SERVICE DATA AND SPECIFICATIONS** are contained at the end of each section for quick reference of data.
- The captions **WARNING** and **CAUTION** warn you of steps that must be followed to prevent personal injury and/or damage to some part of the vehicle.

  WARNING indicates the possibility of personal injury if instructions are not followed.

  CAUTION indicates the possibility of component damage if instructions are not followed.

  BOLD TYPED STATEMENTS except **WARNING** and **CAUTION** give you helpful information.

Sample/Wiring Diagram — EXAMPL —

- For Description, refer to GI-11.

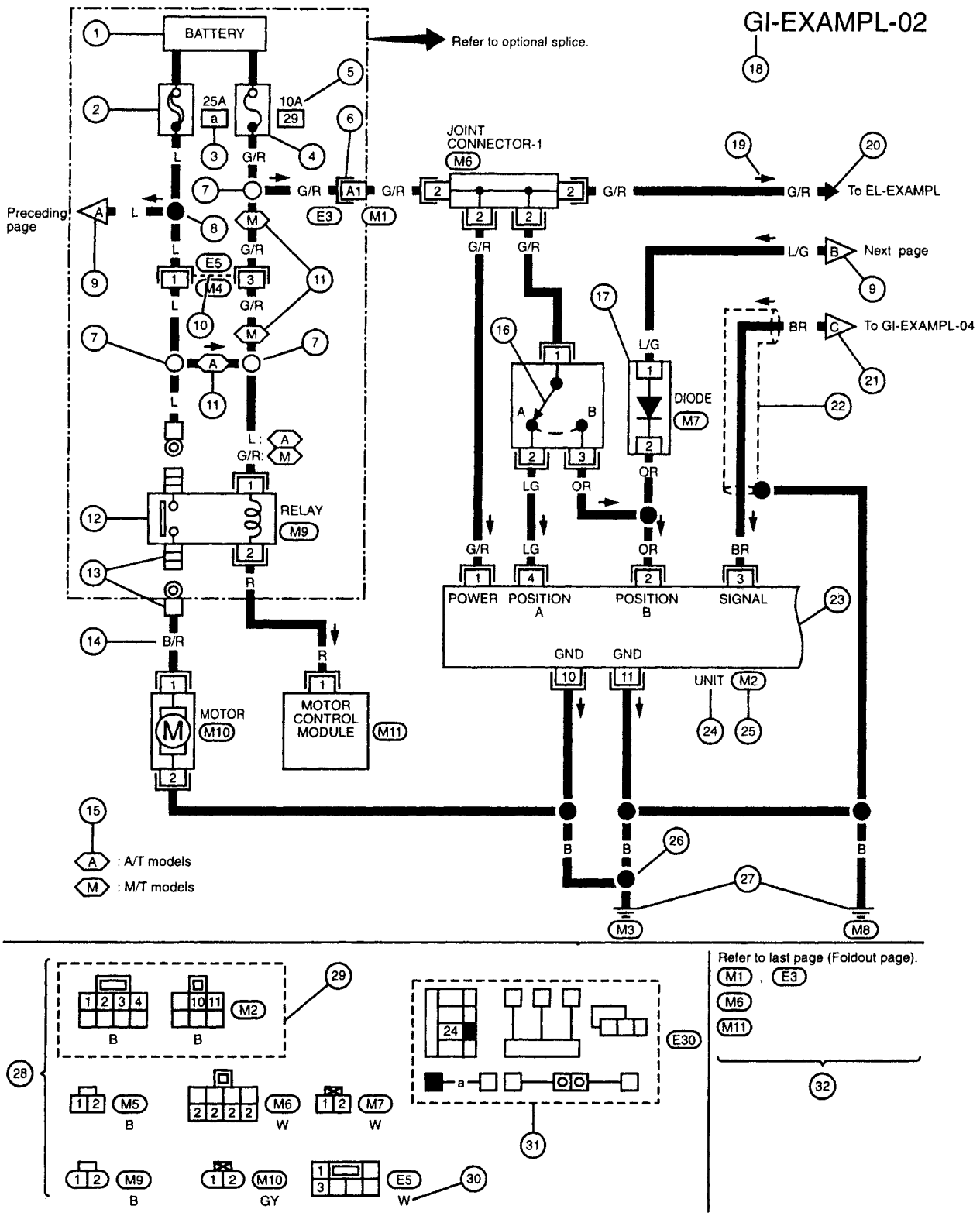

SGI904

OPTIONAL SPLICE

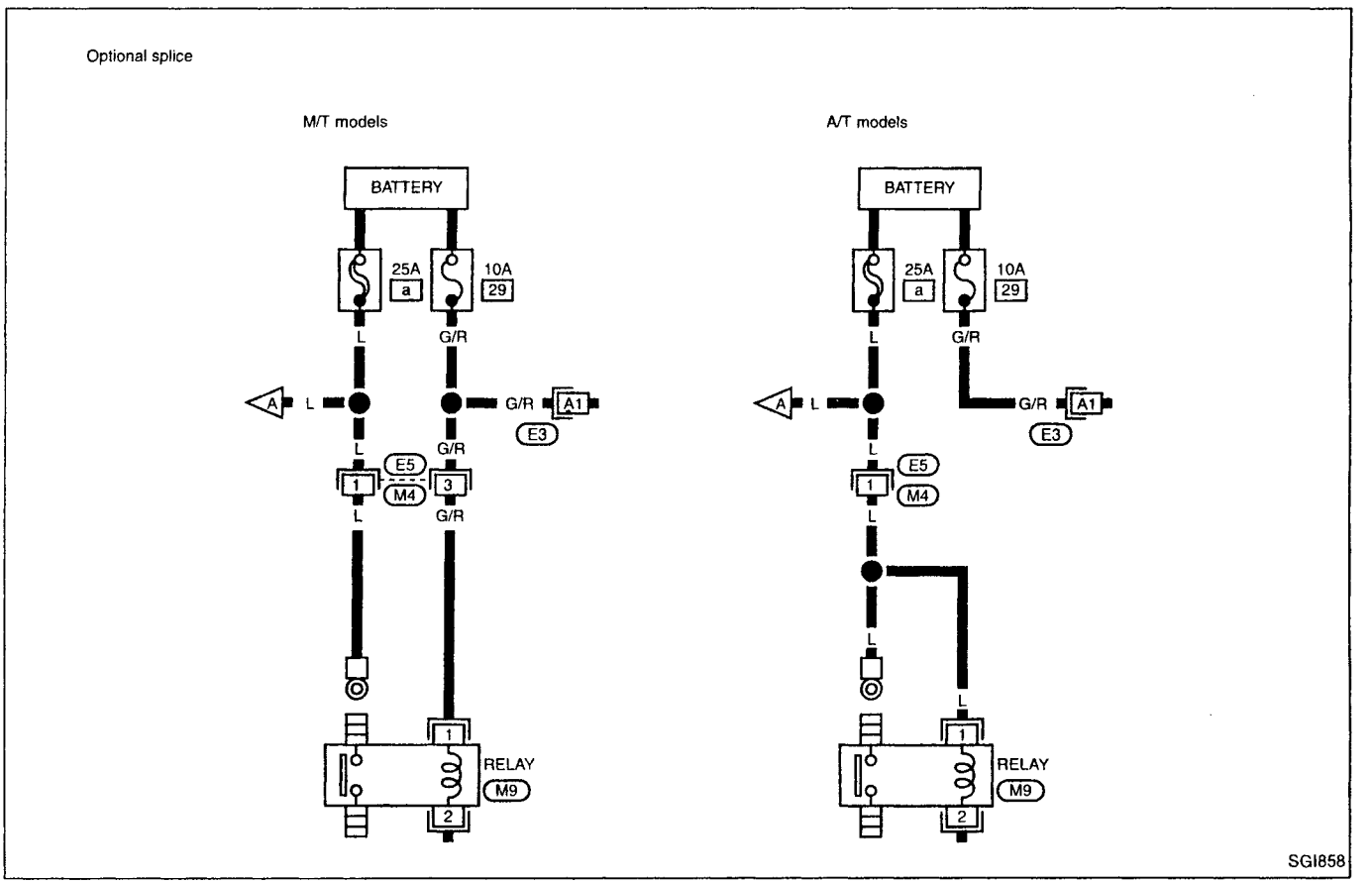

Description

Number	Item	Description
①	Power condition	• This shows the condition when the system receives battery positive voltage (can be operated).
②	Fusible link	• The double line shows that this is a fusible link. • The open circle shows current flow in, and the shaded circle shows current flow out.
③	Fusible link/fuse location	• This shows the location of the fusible link or fuse in the fusible link or fuse box. For arrangement, refer to EL section ("POWER SUPPLY ROUTING").
④	Fuse	• The single line shows that this is a fuse. • The open circle shows current flow in, and the shaded circle shows current flow out.
⑤	Current rating	• This shows the current rating of the fusible link or fuse.
⑥	Connectors	• This shows that connector (E3) is female and connector (M1) is male. • The G/R wire is located in the A1 terminal of both connectors. • Terminal number with an alphabet (A1, B5, etc.) indicates that the connector is SMJ connector. Refer to GI-16.
⑦	Optional splice	• The open circle shows that the splice is optional depending on vehicle application.
⑧	Splice	• The shaded circle shows that the splice is always on the vehicle.
⑨	Page crossing	• This arrow shows that the circuit continues to an adjacent page. • The A will match with the A on the preceding or next page.
⑩	Common connector	• The dotted lines between terminals show that these terminals are part of the same connector.
⑪	Option abbreviation	• This shows that the circuit is optional depending on vehicle application.
⑫	Relay	• This shows an internal representation of the relay. For details, refer to EL section ("STANDARDIZED RELAY").
⑬	Connectors	• This shows that the connector is connected to the body or a terminal with bolt or nut.
⑭	Wire color	• This shows a code for the color of the wire. B = Black BR = Brown W = White OR = Orange R = Red P = Pink G = Green PU = Purple L = Blue GY = Gray Y = Yellow SB = Sky Blue LG = Light Green CH = Dark Brown DG = Dark Green When the wire color is striped, the base color is given first, followed by the stripe color as shown below: Example: L/W = Blue with White Stripe
⑮	Option description	• This shows a description of the option abbreviation used on the page.
⑯	Switch	• This shows that continuity exists between terminals 1 and 2 when the switch is in the A position. Continuity exists between terminals 1 and 3 when the switch is in the B position.
⑰	Assembly parts	• Connector terminal in component shows that it is a harness incorporated assembly.
⑱	Cell code	• This identifies each page of the wiring diagram by section, system and wiring diagram page number.

Description (Cont'd)

Number	Item	Description
⑲	Current flow arrow	• Arrow indicates electric current flow, especially where the direction of standard flow (vertically downward or horizontally from left to right) is difficult to follow. • A double arrow "◀▶" shows that current can flow in either direction depending on circuit operation.
⑳	System branch	• This shows that the system branches to another system identified by cell code (section and system).
㉑	Page crossing	• This arrow shows that the circuit continues to another page identified by cell code. • The C will match with the C on another page within the system other than the next or preceding pages.
㉒	Shielded line	• The line enclosed by broken line circle shows shield wire.
㉓	Component box in wave line	• This shows that another part of the component is also shown on another page (indicated by wave line) within the system.
㉔	Component name	• This shows the name of a component.
㉕	Connector number	• This shows the connector number. • The letter shows which harness the connector is located in. Example: **M**: main harness. For detail and to locate the connector, refer to EL section ("Main Harness", "HARNESS LAYOUT"). A coordinate grid is included for complex harnesses to aid in locating connectors.
㉖	Ground (GND)	• The line spliced and grounded under wire color shows that ground line is spliced at the grounded connector.
㉗	Ground (GND)	• This shows the ground connection.
㉘	Connector views	• This area shows the connector faces of the components in the wiring diagram on the page.
㉙	Common component	• Connectors enclosed in broken line show that these connectors belong to the same component.
㉚	Connector color	• This shows a code for the color of the connector. For code meaning, refer to wire color codes, Number ⑭ of this chart.
㉛	Fusible link and fuse box	• This shows the arrangement of fusible link(s) and fuse(s), used for connector views of "POWER SUPPLY ROUTING" in EL section. The open square shows current flow in, and the shaded square shows current flow out.
㉜	Reference area	• This shows that more information on the Super Multiple Junction (SMJ) and Joint Connectors (J/C) exists on the foldout page. Refer to GI-16 for details.

Description (Cont'd)

CONNECTOR SYMBOLS

Most of connector symbols in wiring diagrams are shown from the terminal side.

- Connector symbols shown from the terminal side are enclosed by a single line.
- Connector symbols shown from the harness side are enclosed by a double line and followed by the direction mark

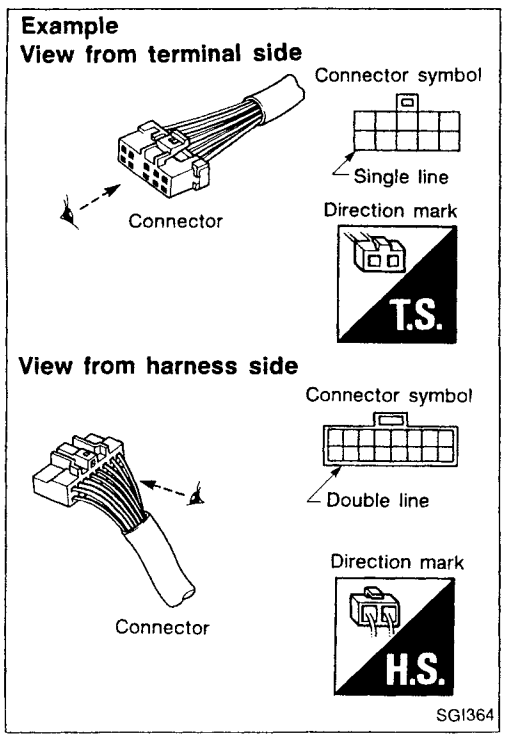

- Male and female terminals
  Connector guides for male terminals are shown in black and female terminals in white in wiring diagrams.

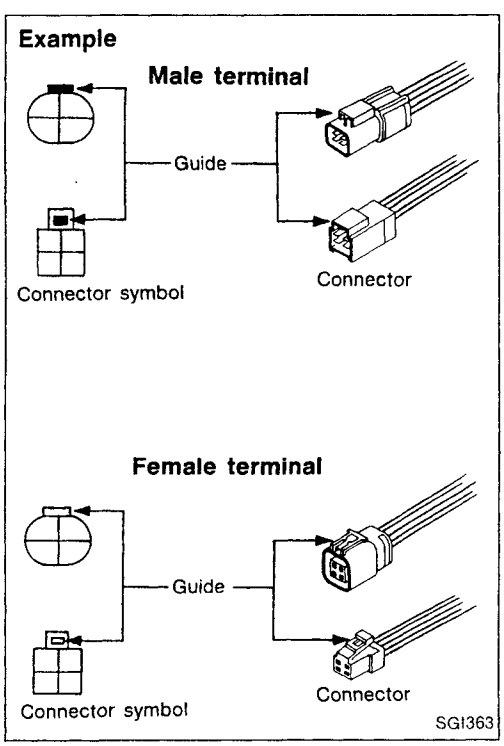

Description (Cont'd)

SWITCH POSITIONS

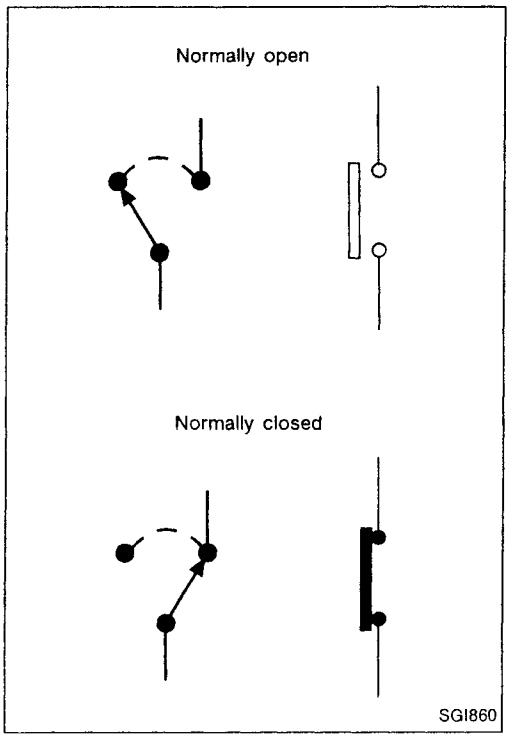

Switches are shown in wiring diagrams as if the vehicle is in the "normal" condition.

A vehicle is in the "normal" condition when:

- ignition switch is "OFF",
- doors, hood and trunk lid/back door are closed,
- pedals are not depressed, and
- parking brake is released.

DETECTABLE LINES AND NON-DETECTABLE LINES

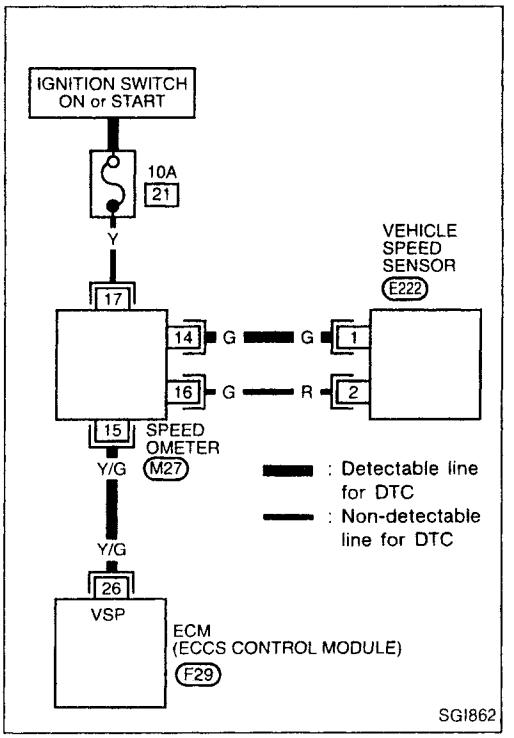

In some wiring diagrams, two kinds of lines, representing wires, with different weight are used.

- A line with regular weight (wider line) represents a "detectable line for DTC (Diagnostic Trouble Code)". A "detectable line for DTC" is a circuit in which ECM (ECCS control module) can detect its malfunctions with the on-board diagnostic system.
- A line with less weight (thinner line) represents a "non-detectable line for DTC". A "non-detectable line for DTC" is a circuit in which ECM cannot detect its malfunctions with the on-board diagnostic system.

Description (Cont'd)

MULTIPLE SWITCH

The continuity of multiple switch is described in two ways as shown below.

- The switch chart is used in schematic diagrams.
- The switch diagram is used in wiring diagrams.

Example

(SWITCH CHART)

WIPER SWITCH

	OFF	INT	LO	HI	WASH
1					○
2				○	
3	○	○	○		
4	○	○			
5		○			
6		○	○	○	○

(SWITCH DIAGRAM)

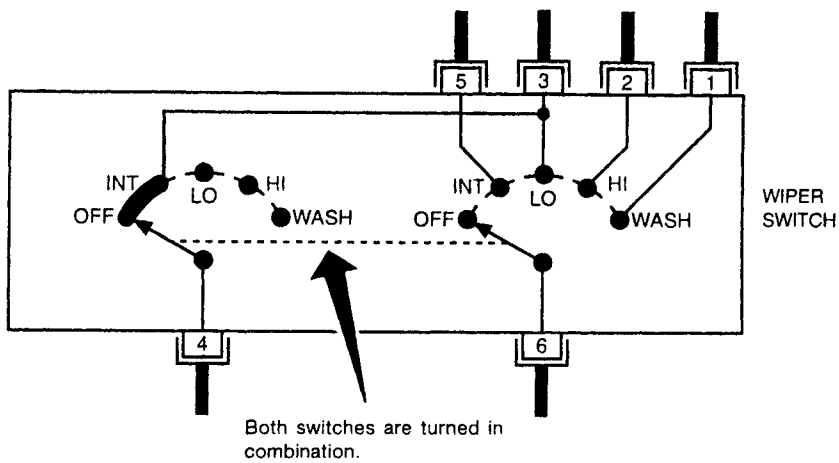

Continuity circuit of wiper switch

SWITCH POSITION	CONTINUITY CIRCUIT
OFF	3-4
INT	3-4, 5-6
LO	3-6
HI	2-6
WASH	1-6

SGI875

Description (Cont'd)

FOLDOUT PAGE

The foldout page should be opened when reading wiring diagram.

Super multiple junction (SMJ)

In wiring diagram, connectors consisting of terminals having terminal numbers with an alphabet (B1, D0, etc.) are SMJ connectors.

If connector numbers are shown in Reference Area, these connector symbols are not shown in Connector Area. For terminal arrangement of these connectors, refer to the foldout page at the end of this manual.

Joint connector

Joint connector symbols are shown in Connector Area in the wiring diagram concerned. Foldout page also carries inside wiring layout together with such joint connector symbols.

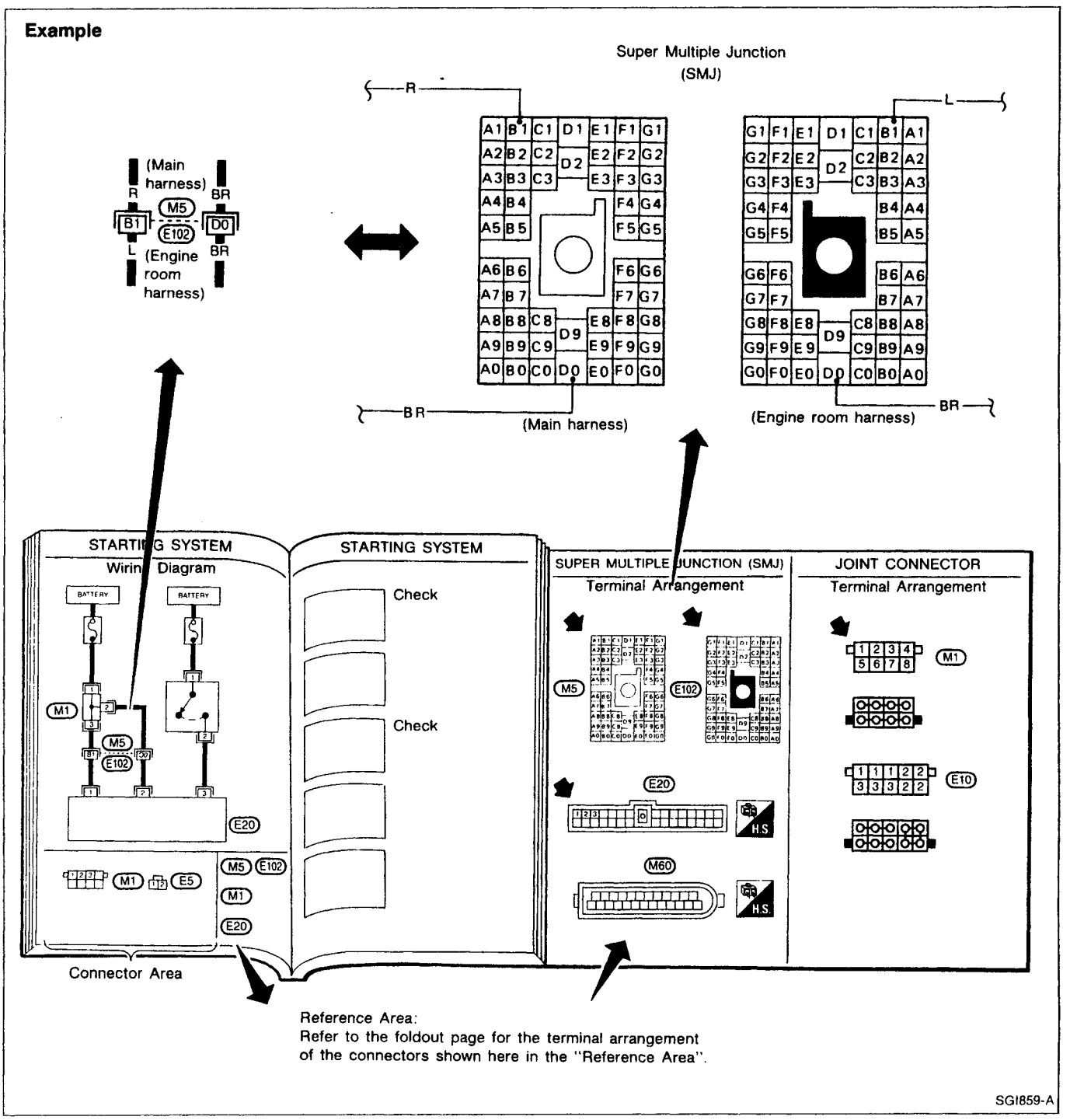

Wiring Diagram Codes (Cell Codes)

Use the chart below to find out what each wiring diagram code stands for.

Code	Section	Wiring Diagram Name
AAC/V	EC	IACV-AAC Valve
ABS	BR	Anti-lock Brake System
A/C	HA	Manual Air Conditioner
A/CCUT	EC	Air Conditioner Cut Control
A/T	AT	Automatic Transmission
AIM	EL	Headlamp System
AIRREG	EC	IACV-Air Regulator
AT/C	EC	A/T Control
AUDIO	EL	Audio
BACK/L	EL	Back-up Lamp
CHARGE	EL	Charging System
CHIME	EL	Warning Chime
CMPS	EC	Camshaft Position Sensor
COOL/F	EC	Cooling Fan Control
DEF	EL	Rear Window Defogger
D/LOCK	EL	Power Door Lock
DTRL	EL	Headlamp — With Daytime Light System
ECTS	EC	Engine Coolant Temperature Sensor
EGRC/V	EC	EGR and canister Control Solenoid Valve
FCUT	EC	Fuel Cut Solenoid Valve
F/FOG	EL	Front Fog Lamp
FICD	EC	IACV-FICD Solenoid Valve
F/PUMP	EC	Fuel Pump
GLOW	EC	Quick-glow system
H/LAMP	EL	Headlamp — Without Daytime Light System
H/SEAT	EL	Heated Seat
HEAT	HA	Heater
HLC	EL	Headlamp Washer
HO2S	EC	Heated Oxygen Sensor
HORN	EL	Horn, Cigarette Lighter, Clock
IATS	EC	Intake Air Temperature Sensor
IGN/SG	EC	Ignition Signal
ILL	EL	Illumination
INJECT	EC	Injector
INT/L	EL	Interior, Spot and Trunk Room Lamps

Code	Section	Wiring Diagram Name
KS	EC	Knock Sensor
LKUP	EC	Torque Converter Clutch Solenoid Valve
LOAD	EC	Load Signal
MAFS	EC	Mass Air Flow Sensor
MAIN	EC	Main Power Supply and Ground Circuit
METER	EL	Speedometer, Tachometer, Temp. and Fuel Gauges
MIL	EC	MIL, Data Link Connector For CONSULT
MIRROR	EL	DOOR MIRROR
NATS	EL	NISSAN ANTI-THEFT SYSTEM
O2S	EC	OXYGEN SENSOR
PGC/V	EC	EVAP CANISTER PURGE CONTROL SOLENOID VALVE
PLA	EC	PARTIAL LOAD ADVANCE CONTROL
PNP/SW	EC	PARK/NEUTRAL POSITION SWITCH
POWER	EL	POWER SUPPLY ROUTING
PST/SW	EC	POWER STEERING OIL PRESSURE SWITCH
R/FOG	EL	REAR FOG LAMP
SROOF	EL	SUN ROOF
SRS	RS	SUPPLEMENTAL RESTRAINT SYSTEM
S/SIG	EC	START SIGNAL
START	EL	STARTING SYSTEM
STOP/L	EL	STOP LAMP
TAIL/L	EL	CLEARANCE, LICENSE, AND TAIL LAMPS
TPS	EC	THROTTLE POSITION SENSOR
TURN	EL	TURN SIGNAL AND HAZARD WARNING LAMPS
VSS	EC	VEHICLE SPEED SENSOR
VTC	EC	VTC SOLENOID VALVE
WARN	EL	WARNING LAMPS
WINDOW	EL	POWER WINDOW
WIPER	EL	FRONT WIPER AND WASHER
WIP/R	EL	REAR WIPER AND WASHER

Work Flow

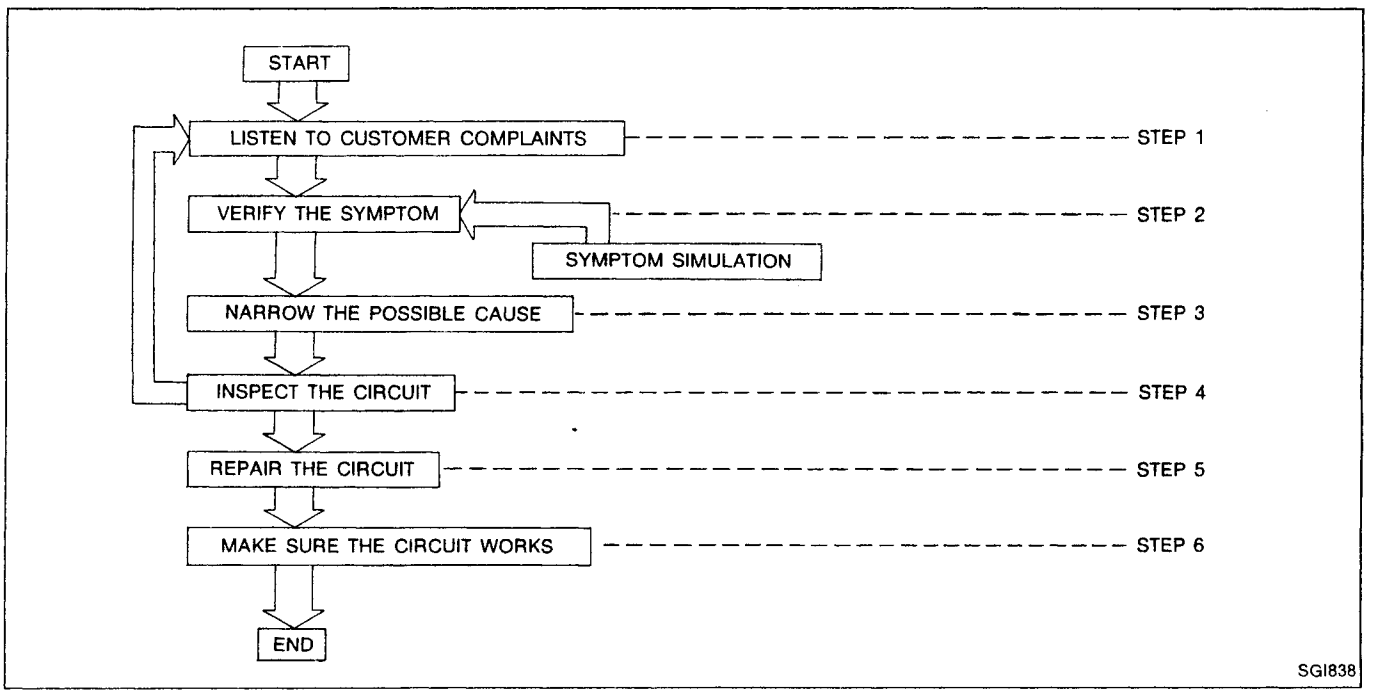

STEP	DESCRIPTION
STEP 1	Get detailed information about the conditions and the environment when the incident occurred. The following are key pieces of information required to make a good analysis: **WHAT** Vehicle Model, Engine, Transmission and the System (i.e. Radio). **WHEN** Date, Time of Day, Weather Conditions, Frequency. **WHERE** Road Conditions, Altitude and Traffic Situation. **HOW** System Symptoms, Operating Conditions (Other Components Interaction). Service History and if any After Market Accessories have been installed.
STEP 2	Operate the system, road test if necessary. Verify the parameter of the incident. If the problem can not be duplicated, refer to "Incident Simulation Tests" next page.
STEP 3	Get the proper diagnosis materials together including: POWER SUPPLY ROUTING System Operation Descriptions Applicable Service Manual Sections Identify where to begin diagnosis based upon your knowledge of the system operation and the customer comments.
STEP 4	Inspect the system for mechanical binding, loose connectors or wiring damage. Determine which circuits and components are involved and diagnose using the Power Supply Routing and Harness Layouts.
STEP 5	Repair or replace the incident circuit or component.
STEP 6	Operate the system in all modes. Verify the system works properly under all conditions. Make sure you have not inadvertently created a new incident during your diagnosis or repair steps.

Incident Simulation Tests

INTRODUCTION

Sometimes the symptom is not present when the vehicle is brought in for service. If possible, re-create the conditions present at the time of the incident. Doing so may help avoid a No Trouble Found Diagnosis. The following section illustrates ways to simulate the conditions/environment under which the owner experiences an electrical incident.

The section is broken into the six following topics:

- Vehicle vibration
- Heat sensitive
- Freezing
- Water intrusion
- Electrical load
- Cold or hot start up

Get a thorough description of the incident from the customer. It is important for simulating the conditions of the problem.

VEHICLE VIBRATION

The problem may occur or become worse while driving on a rough road or when engine is vibrating (idle with A/C on). In such a case, you will want to check for a vibration related condition. Refer to the illustration below.

Connectors & harness

Determine which connectors and wiring harness would affect the electrical system you are inspecting. **Gently** shake each connector and harness while monitoring the system for the incident you are trying to duplicate. This test may indicate a loose or poor electrical connection.

Hint

Connectors can be exposed to moisture. It is possible to get a thin film of corrosion on the connector terminals. A visual inspection may not reveal this without disconnecting the connector. If the problem occurs intermittently, perhaps the problem is caused by corrosion. It is a good idea to disconnect, inspect and clean the terminals on related connectors in the system.

Sensors & relays

Gently apply a slight vibration to sensors and relays in the system you are inspecting.
This test may indicate a loose or poorly mounted sensor or relay.

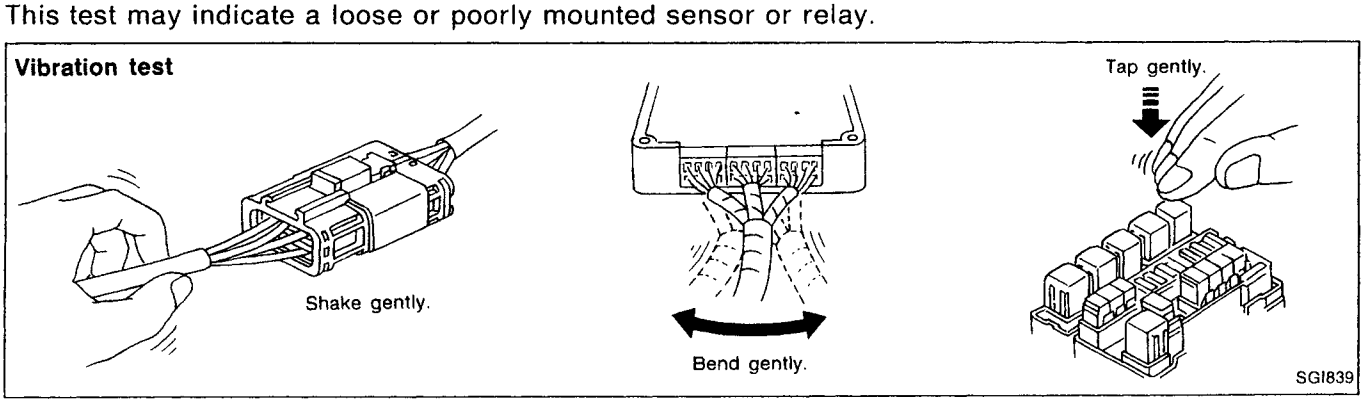

Incident Simulation Tests (Cont'd)

Possible cause

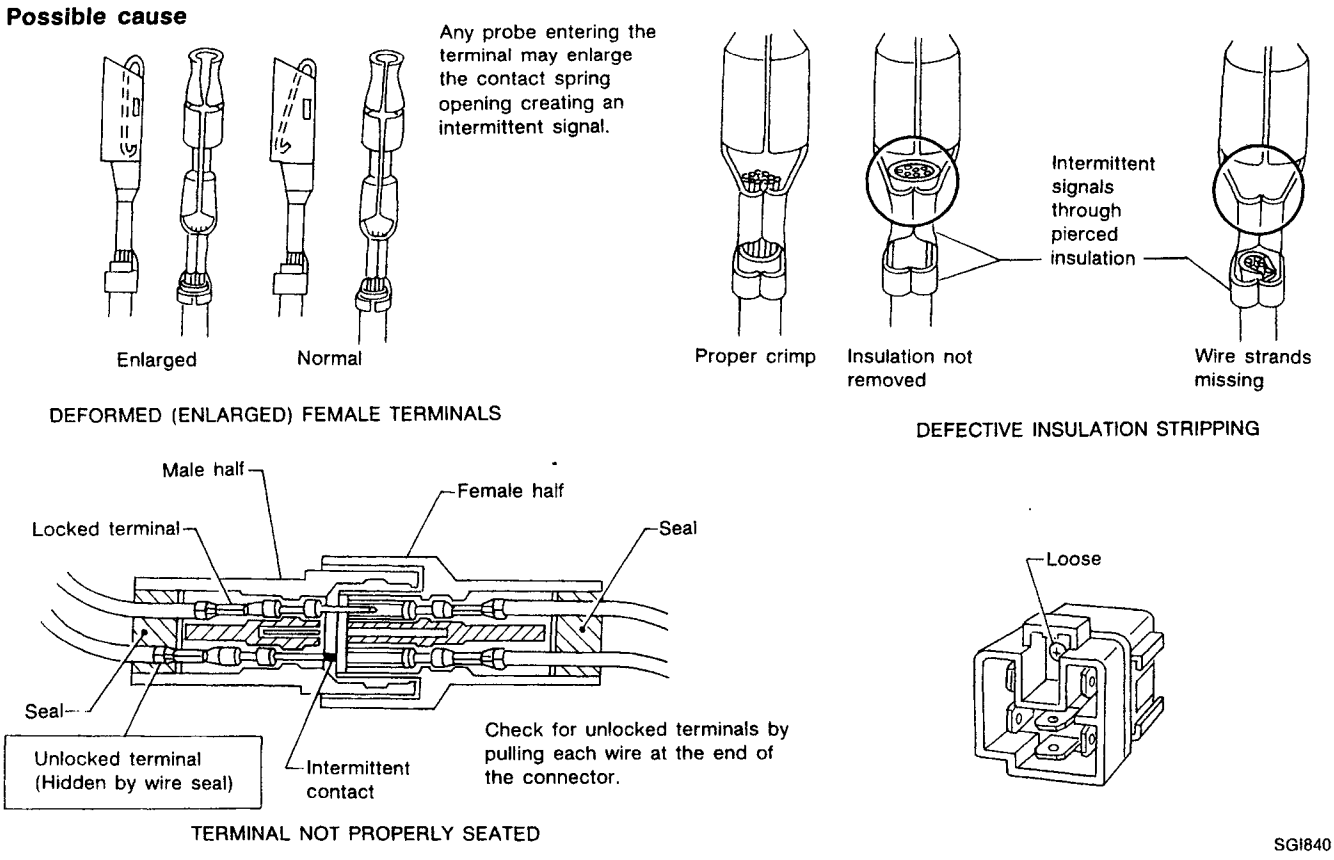

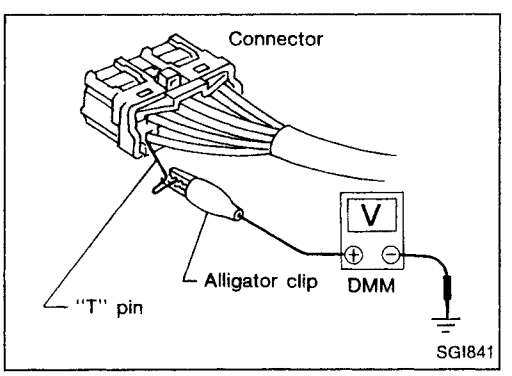

Tester probe

When probing a connector it is possible to enlarge the contact spring opening. If this occurs it may create an intermittent signal in the circuit. When probing a connector, use care not to enlarge the opening. The probe of the Digital Multimeter (DMM) may not fit into the connector cavity. In such cases make an extension of a "T" pin and probe it from the harness side of the connector. Most DMMs have accessory alligator clips. Slide these over the probe to allow clipping the "T" pin for a better contact. If you have any difficulty probing a terminal, inspect the terminal. Ensure you have not accidentally opened the contact spring or pulled a wire loose.

Incident Simulation Tests (Cont'd)

Engine compartment

There are several reasons a vehicle or engine vibration could cause an electrical complaint. Some of the things to check for are:

- Connectors not fully seated.
- Wiring harness not long enough and is being stressed due to engine vibrations or rocking.
- Wires laying across brackets or moving components.
- Loose, dirty or corroded ground wires.
- Wires routed too close to hot components.

To inspect components under the hood, start by verifying the integrity of ground connections. (Refer to GROUND INSPECTION described later.) First check that the system is properly grounded. Then check for loose connection by **gently shaking** the wiring or components as previously explained. Using the wiring diagrams inspect the wiring for continuity.

Behind the instrument panel

An improperly routed or improperly clamped harness can become pinched during accessory installation. Vehicle vibration can aggravate a harness which is routed along a bracket or near a screw.

Under seating areas

An unclamped or loose harness can cause wiring to be pinched by seat components (such as slide guides) during vehicle vibration. If the wiring runs under seating areas, inspect wire routing for possible damage or pinching.

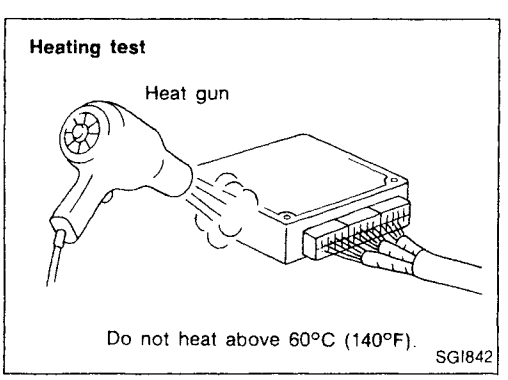

HEAT SENSITIVE

The owner's problem may occur during hot weather or after car has sat for a short time. In such cases you will want to check for a heat sensitive condition.
To determine if an electrical component is heat sensitive, heat the component with a heat gun or equivalent.
Do not heat components above 60°C (140°F). If incident occurs while heating the unit, either replace or properly insulate the component.

Incident Simulation Tests (Cont'd)

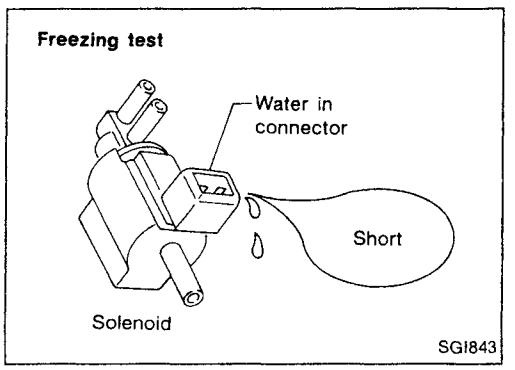

FREEZING

The customer may indicate the incident goes away after the car warms up (winter time). The cause could be related to water freezing somewhere in the wiring/electrical system.

There are two methods to check for this. The first is to arrange for the owner to leave his car overnight. Make sure it will get cold enough to demonstrate his complaint. Leave the car parked outside overnight. In the morning, do a quick and thorough diagnosis of those electrical components which could be affected.

The second method is to put the suspect component into a freezer long enough for any water to freeze. Reinstall the part into the car and check for the reoccurrence of the incident. If it occurs, repair or replace the component.

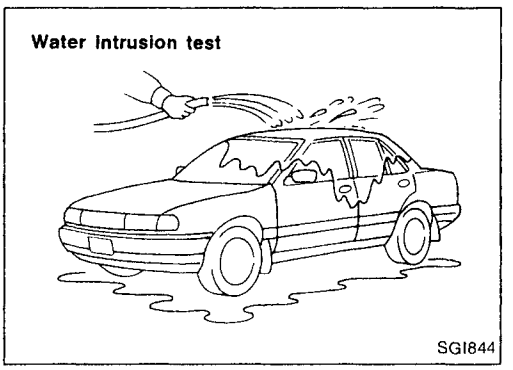

WATER INTRUSION

The incident may occur only during high humidity or in rainy/snowy weather. In such cases the incident could be caused by water intrusion on an electrical part. This can be simulated by soaking the car or running it through a car wash.

Do not spray water directly on any electrical components.

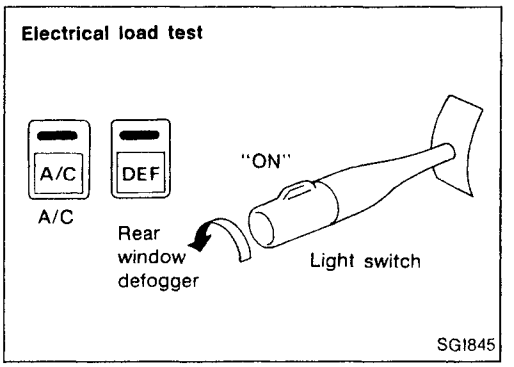

ELECTRICAL LOAD

The incident may be electrical load sensitive. Perform diagnosis with all accessories (including A/C, rear window defogger, radio, fog lamps) turned on.

COLD OR HOT START UP

On some occasions an electrical incident may occur only when the car is started cold. Or it may occur when the car is restarted hot shortly after being turned off. In these cases you may have to keep the car overnight to make a proper diagnosis.

Circuit Inspection

INTRODUCTION

In general, testing electrical circuits is an easy task if it is approached in a logical and organized method. Before beginning it is important to have all available information on the system to be tested. Also, get a thorough understanding of system operation. Then you will be able to use the appropriate equipment and follow the correct test procedure.
You may have to simulate vehicle vibrations while testing electrical components. **Gently shake** the wiring harness or electrical component to do this.

OPEN	A circuit is open when there is no continuity through a section of the circuit.	
SHORT	There are two types of shorts.	
	• SHORT CIRCUIT	When a circuit contacts another circuit and causes the normal resistance to change.
	• SHORT TO GROUND	When a circuit contacts a ground source and grounds the circuit.

TESTING FOR "OPENS" IN THE CIRCUIT

Before you begin to diagnose and test the system, you should rough sketch a schematic of the system. This will help you to logically walk through the diagnosis process. Drawing the sketch will also reinforce your working knowledge of the system.

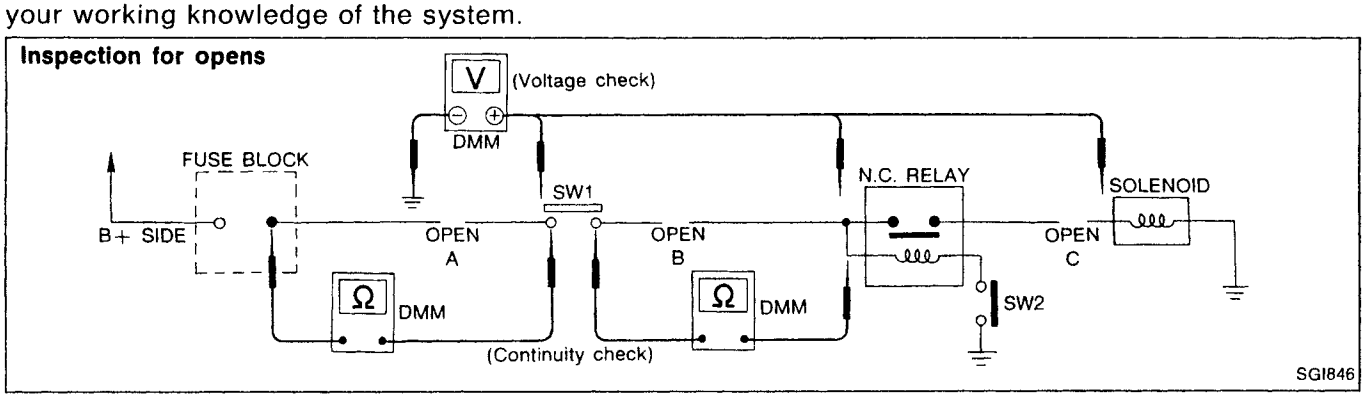

Continuity check method

The continuity check is used to find an open in the circuit. The Digital Multimeter (DMM) set on the resistance function will indicate an open circuit as over limit (OL, no beep tone or no ohms symbol). Make sure to always start with the DMM at the highest resistance level.
To help in understanding the diagnosis of open circuits please refer to the schematic above.

1. Disconnect the battery negative cable.
2. Start at one end of the circuit and work your way to the other end. (At the fuse block in this example)
3. Connect one probe of the DMM to the fuse block terminal on the load side.
4. Connect the other probe to the fuse block (power) side of SW1. Little or no resistance will indicate that portion of the circuit has good continuity. If there were an open in the circuit, the DMM would indicate an over limit or infinite resistance condition. (point A)
5. Connect the probes between SW1 and the relay. Little or no resistance will indicate that portion of the circuit has good continuity. If there were an open in the circuit, the DMM would indicate an over limit or infinite resistance condition. (point B)
6. Connect the probes between the relay and the solenoid. Little or no resistance will indicate that portion of the circuit has good continuity. If there were an open in the circuit, the DMM would indicate an over limit or infinite resistance condition. (point C)

Any circuit can be diagnosed using the approach in the above example.

Circuit Inspection (Cont'd)

Voltage check method

To help in understanding the diagnosis of open circuits please refer to the previous schematic.
In any powered circuit, an open can be found by methodically checking the system for the presence of voltage. This is done by switching the DMM to the voltage function.

1. Connect one probe of the DMM to a known good ground.
2. Begin probing at one end of the circuit and work your way to the other end.
3. With SW1 open, probe at SW1 to check for voltage.
   voltage; open is further down the circuit than SW1.
   no voltage; open is between fuse block and SW1 (point A).
4. Close SW1 and probe at relay.
   voltage; open is further down the circuit than the relay.
   no voltage; open is between SW1 and relay (point B).
5. Close the relay and probe at the solenoid.
   voltage; open is further down the circuit than the solenoid.
   no voltage; open is between relay and solenoid (point C).

Any powered circuit can be diagnosed using the approach in the above example.

TESTING FOR "SHORTS" IN THE CIRCUIT

To simplify the discussion of shorts in the system please refer to the schematic below.

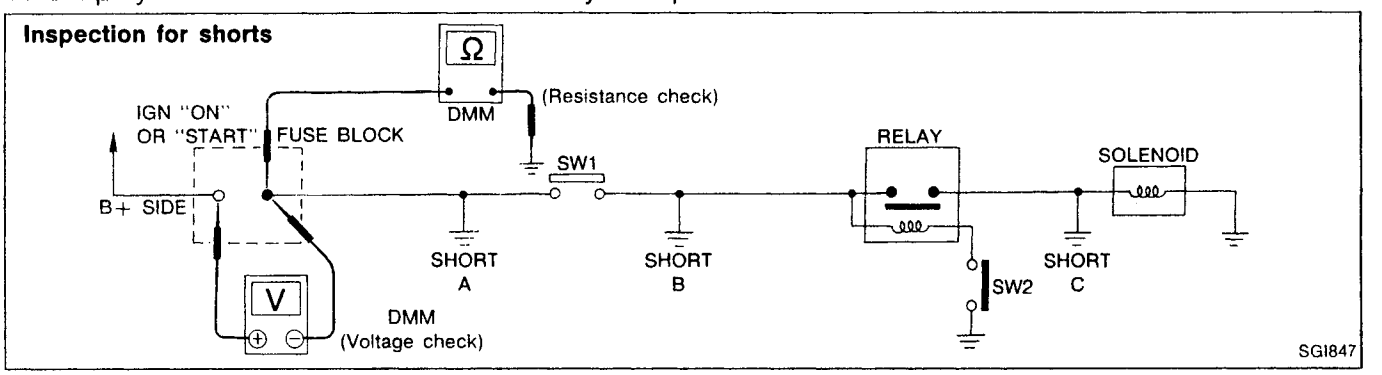

Resistance check method

1. Disconnect the battery negative cable and remove the blown fuse.
2. Disconnect all loads (SW1 open, relay disconnected and solenoid disconnected) powered through the fuse.
3. Connect one probe of the ohmmeter to the load side of the fuse terminal. Connect the other probe to a known good ground.
4. With SW1 open, check for continuity.
   continuity; short is between fuse terminal and SW1 (point A).
   no continuity; short is further down the circuit than SW1.
5. Close SW1 and disconnect the relay. Put probes at the load side of fuse terminal and a known good ground. Then, check for continuity.
   continuity; short is between SW1 and the relay (point B).
   no continuity; short is further down the circuit than the relay.
6. Close SW1 and jump the relay contacts with jumper wire. Put probes at the load side of fuse terminal and a known good ground. Then, check for continuity.
   continuity; short is between relay and solenoid (point C).
   no continuity; check solenoid, retrace steps.

Circuit Inspection (Cont'd)

Voltage check method

1. Remove the blown fuse and disconnect all loads (i.e. SW1 open, relay disconnected and solenoid disconnected) powered through the fuse.
2. Turn the ignition key to the ON or START position. Verify battery voltage at the B + side of the fuse terminal (one lead on the B + terminal side of the fuse block and one lead on a known good ground).
3. With SW1 open and the DMM leads across both fuse terminals, check for voltage.
   voltage; short is between fuse block and SW1 (point A).
   no voltage; short is further down the circuit than SW1.
4. With SW1 closed, relay and solenoid disconnected and the DMM leads across both fuse terminals, check for voltage.
   voltage; short is between SW1 and the relay (point B).
   no voltage; short is further down the circuit than the relay.
5. With SW1 closed, relay contacts jumped with fused jumper wire check for voltage.
   voltage; short is down the circuit of the relay or between the relay and the disconnected solenoid (point C).
   no voltage; retrace steps and check power to fuse block.

GROUND INSPECTION

Ground connections are very important to the proper operation of electrical and electronic circuits. Ground connections are often exposed to moisture, dirt and other corrosive elements. The corrosion (rust) can become an unwanted resistance. This unwanted resistance can change the way a circuit works.

Electronically controlled circuits are very sensitive to proper grounding. A loose or corroded ground can drastically affect an electronically controlled circuit. A poor or corroded ground can easily affect the circuit. Even when the ground connection looks clean, there can be a thin film of rust on the surface.

When inspecting a ground connection follow these rules:

1. Remove the ground bolt screw or clip.
2. Inspect all mating surfaces for tarnish, dirt, rust, etc.
3. Clean as required to assure good contact.
4. Reinstall bolt or screw securely.
5. Inspect for "add-on" accessories which may be interfering with the ground circuit.
6. If several wires are crimped into one ground eyelet terminal, check for proper crimps. Make sure all of the wires are clean, securely fastened and providing a good ground path. If multiple wires are cased in one eyelet make sure no ground wires have excess wire insulation.

Ground Inspection

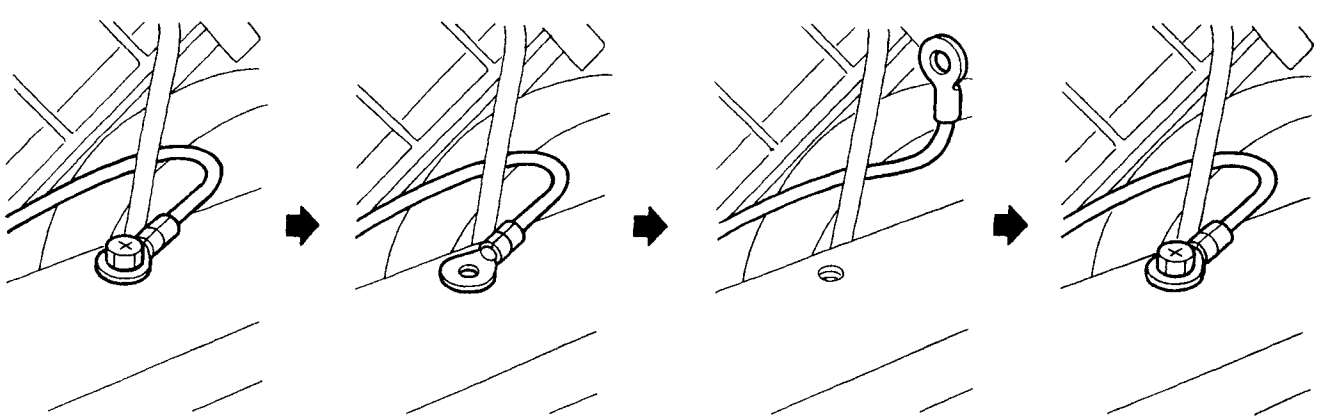

Remove bolt (screw).

Inspect mating surfaces for tarnish, dirt, rust, etc. Clean as required to assure good contact.

Reinstall bolt (screw) securely.

SGI853

VOLTAGE DROP TESTS

Voltage drop tests are often used to find components or circuits which have excessive resistance. A voltage drop in a circuit is caused by a resistance **when the circuit is in operation**.
Check the wire in the illustration. When measuring resistance with ohmmeter, contact by a single strand of wire will give reading of 0 ohms. This would indicate a good circuit. When the circuit operates, this single strand of wire is not able to carry the current. The single strand will have a high resistance to the current. This will be picked up as a slight voltage drop.
Unwanted resistance can be caused by many situations as follows:

Undersized wiring (single strand example)
Corrosion on switch contacts
Loose wire connections or splices.

If repairs are needed always use wire that is of the same or larger gauge.

Measuring voltage drop — Accumulated method

1. Connect the voltmeter across the connector or part of the circuit you want to check. The positive lead of the voltmeter should be closer to power and the negative lead closer to ground.
2. Operate the circuit.
3. The voltmeter will indicate how many volts are being used to "push" current through that part of the circuit.

Note in the illustration that there is an excessive 4.1 volt drop between the battery and the bulb.

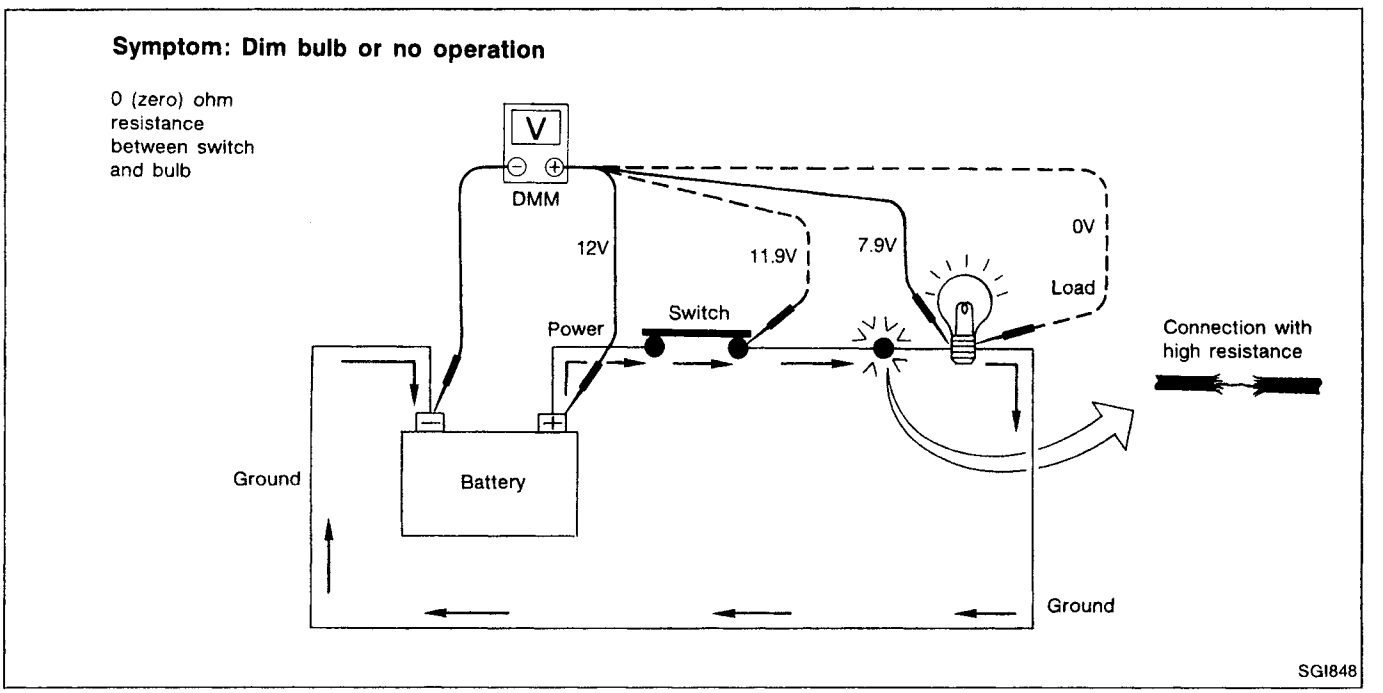

Measuring voltage drop — Step by step

The step by step method is most useful for isolating excessive drops in low voltage systems (such as those in "Computer Controlled Systems").
Circuits in the "Computer Controlled System" operate on very low amperage.
The (Computer Controlled) system operations can be adversely affected by any variation in resistance in the system. Such resistance variation may be caused by poor connection, improper installation, improper wire gauge or corrosion.
The step by step voltage drop test can identify a component or wire with too much resistance.

Circuit Inspection (Cont'd)

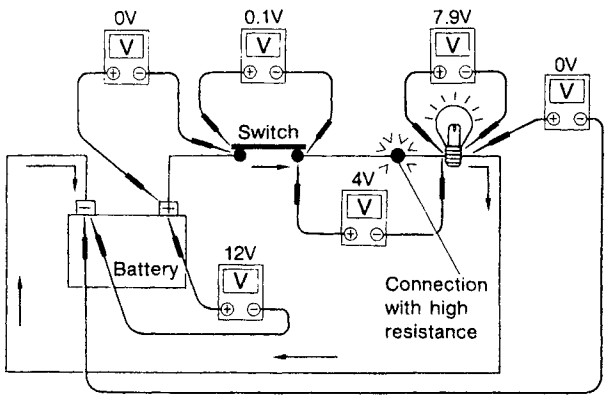

1. Connect the voltmeter as shown, starting at the battery and working your way around the circuit.
2. An unusually large voltage drop will indicate a component or wire that needs to be repaired. As you can see the illustration above, the poor connection causes a 4 volt drop.

The chart that follows illustrates some maximum allowable voltage drops. These values are given as a guideline, the exact value for each component may vary.

COMPONENT	VOLTAGE DROP
Wire	negligible <.001 volts
Ground Connections	Approx. 0.1 volts
Switch Contacts	Approx. 0.3 volts

SGI854

Circuit Inspection (Cont'd)

Relationship between open/short (high resistance) circuit and the ECM pin control

System Description: When the switch is ON, the ECM lights up the lamp.

Case 1

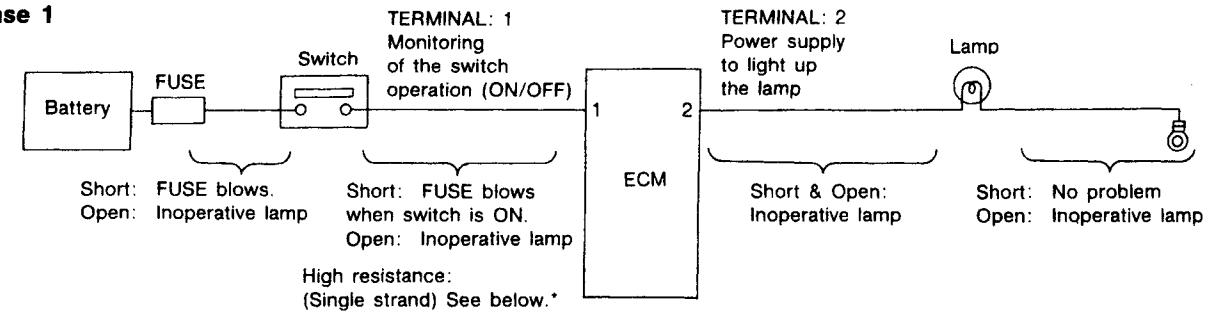

Input-output voltage chart

Pin No.	Item	Condition	Voltage value [V]	In case of high resistance such as single strand [V] *
1	Switch	Switch ON	Battery voltage	Lower than battery voltage Approx. 8 (Example)
		OFF	Approx. 0	Approx. 0
2	Lamp	Switch ON	Battery voltage	Approx. 0 (Inoperative lamp)
		OFF	Approx. 0	Approx. 0

The voltage value is based on the body ground.

* : If high resistance exists in the switch side circuit (caused by a single strand), terminal 1 does not detect battery voltage. ECM does not detect the switch is ON even if the switch does turn ON. Therefore, the ECM does not supply power to light up the lamp.

Case 2

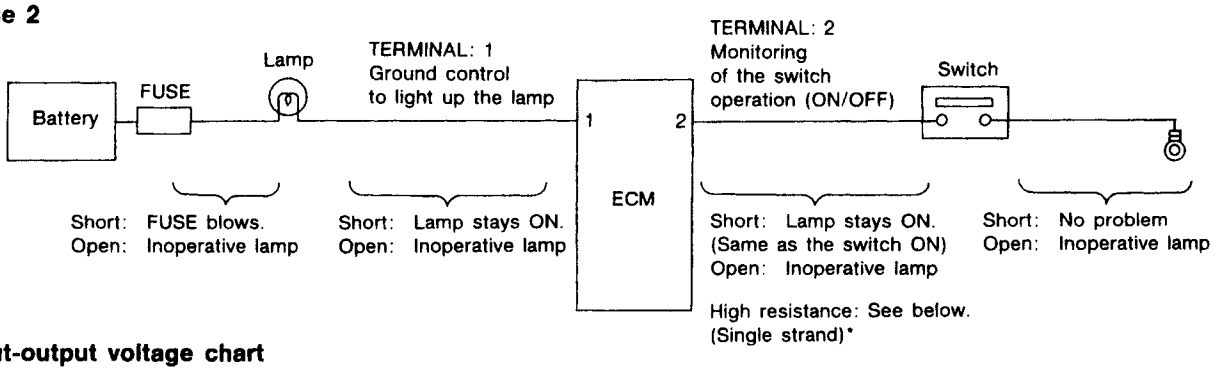

Input-output voltage chart

Pin No.	Item	Condition	Voltage value [V]	In case of high resistance such as single strand [V] *
1	Lamp	Switch ON	Approx. 0	Battery voltage (Inoperative lamp)
		OFF	Battery voltage	Battery voltage
2	Switch	Switch ON	Approx. 0	Higher than 0 Approx. 4 (Example)
		OFF	Approx. 5	Approx. 5

The voltage value is based on the body ground.

* : If high resistance exists in the switch side circuit (caused by a single strand), terminal 2 does not detect approx. 0V. ECM does not detect the switch is ON even if the switch does turn ON. Therefore, the ECM does not control ground to light up the lamp.

SGI849-A

NOTICE

The flow chart indicates work procedures required to diagnose problems effectively. Observe the following instructions before diagnosing.

1) **Use the flow chart after locating probable causes of a problem following the "Preliminary Check", the "Symptom Chart" or the "Work Flow".**
2) **After repairs, re-check that the problem has been completely eliminated.**
3) **Refer to Component Parts and Harness Connector Location for the Systems described in each section for identification/location of components and harness connectors.**
4) **Refer to the Circuit Diagram for Quick Pinpoint Check. If you must check circuit continuity between harness connectors in more detail, such as when a sub-harness is used, refer to Wiring Diagram in each individual section and Harness Layout in EL section for identification of harness connectors.**
5) **When checking circuit continuity, ignition switch should be "OFF".**
6) **Before checking voltage at connectors, check battery voltage.**
7) **After accomplishing the Diagnostic Procedures and Electrical Components Inspection, make sure that all harness connectors are reconnected as they were.**

Example

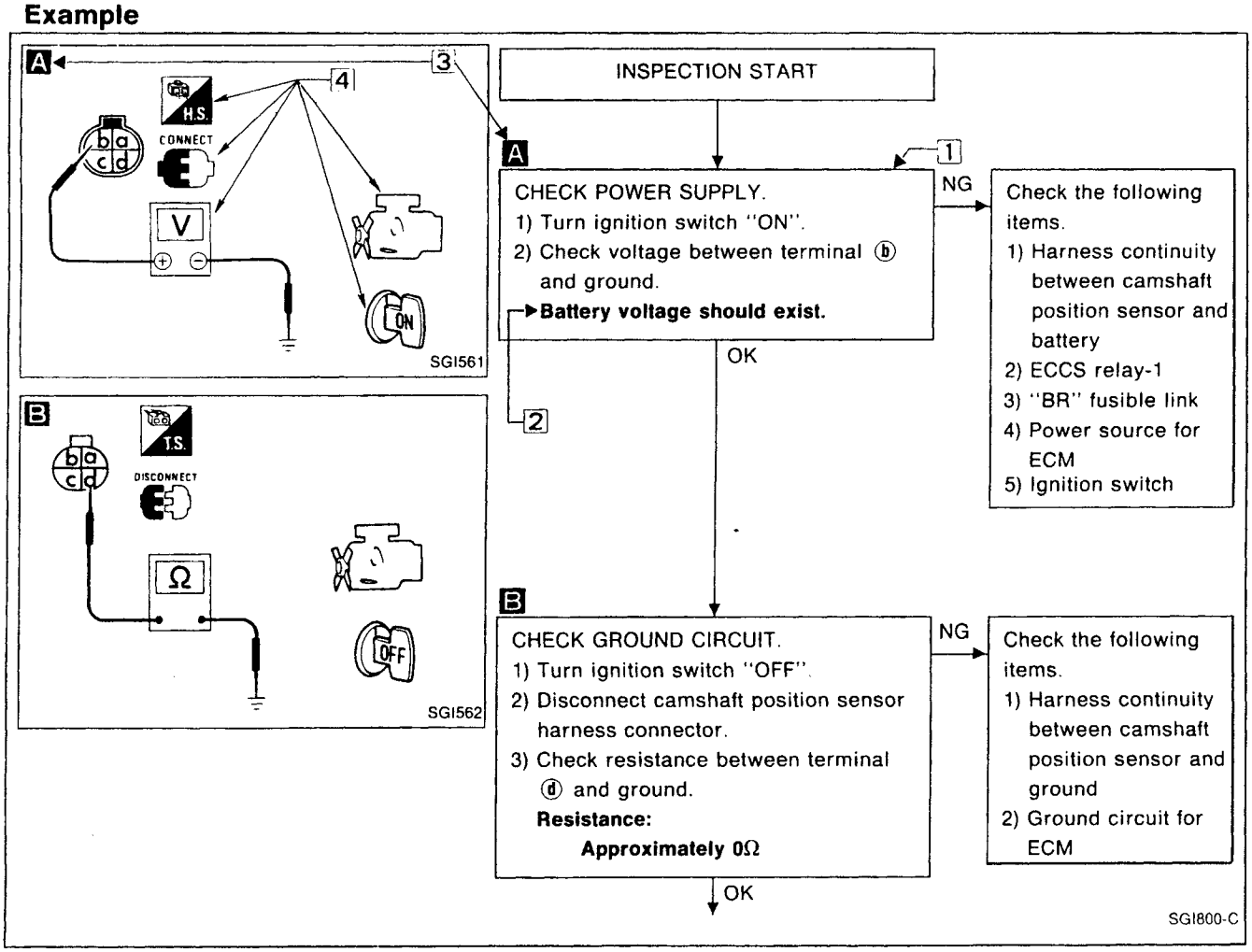

HOW TO FOLLOW THIS FLOW CHART

1 Work and diagnostic procedure

Start to diagnose a problem using procedures indicated in enclosed blocks, as shown in the following example.

A

CHECK POWER SUPPLY.	← Check item being performed.
1) Turn ignition switch "ON".	Procedure, steps or measurement results
2) Check voltage between terminal ⓑ and ground.	
Battery voltage should exist.	

2 Measurement results

Required results are indicated in bold type in the corresponding block, as shown below:
These have the following meanings:

Battery voltage → 11 - 14V or approximately 12V
Voltage: Approximately 0V → Less than 1V

3 Cross reference of work symbols in the text and illustrations

Illustrations are provided as visual aids for work procedures. For example, symbol A indicated in the left upper portion of each illustration corresponds with the symbol in the flow chart for easy identification. More precisely, the procedure under the "CHECK POWER SUPPLY" outlined previously is indicated by an illustration A .

4 Symbols used in illustrations

Symbols included in illustrations refer to measurements or procedures. Before diagnosing a problem, familiarize yourself with each symbol.

Direction mark

Refer to "CONNECTOR SYMBOLS" on GI-13.

Key to symbols signifying measurements or procedures

Symbol	Symbol explanation	Symbol	Symbol explanation
DISCONNECT	Check after disconnecting the connector to be measured.	A	Current should be measured with an ammeter.
CONNECT	Check after connecting the connector to be measured.		Procedure with CONSULT
	Insert key into ignition switch.		Procedure without CONSULT
	Remove key from ignition switch.	A/C	A/C switch is "OFF".
OFF	Turn ignition switch to "OFF" position.	A/C	A/C switch is "ON".
ON	Turn ignition switch to "ON" position.	OFF 1 2 3 4	Fan switch is "ON". (At any position except for "OFF" position)
ST	Turn ignition switch to "START" position.	OFF 1 2 3 4	Fan switch is "OFF".
OFF→ACC	Turn ignition switch from "OFF" to "ACC" position.	FUSE BAT	Apply positive voltage from battery with fuse directly to components.
ACC→OFF	Turn ignition switch from "ACC" to "OFF" position.		Drive vehicle.
OFF→ON	Turn ignition switch from "OFF" to "ON" position.	BAT	Disconnect battery negative cable.
ON→OFF	Turn ignition switch from "ON" to "OFF" position.		Depress brake pedal.
	Do not start engine, or check with engine stopped.		Release brake pedal.
	Start engine, or check with engine running.		Depress accelerator pedal.
	Apply parking brake.		Release accelerator pedal.
	Release parking brake.	C/UNIT CONNECTOR or ECM CONNECTOR B H.S. DISCONNECT V	Pin terminal check for SMJ type ECM and A/T control unit connectors. **For details regarding the terminal arrangement, refer to the foldout page.** 1 2 3 4 5 6 7 8 9 10 11 12 H.S. DISCONNECT V
C H	Check after engine is warmed up sufficiently.		
V	Voltage should be measured with a voltmeter.		
Ω Ω	Circuit resistance should be measured with an ohmmeter.		

Function and System Application

Diagnostic test mode	Function	ECCS	Air bag	ABS	NATS*1
Work support	This mode enables a technician to adjust some devices faster and more accurately by following the indications on CONSULT.	×	—	—	—
Self-diagnostic results	Self-diagnostic results can be read and erased quickly.	×	×	×	×
ECU discriminated No.	Classification number of a replacement ECU can be read to prevent an incorrect ECU from being installed.	—	×	—	—
Data monitor	Input/Output data in the ECM can be read.	×	—	×	—
Active test	Diagnostic Test Mode in which CONSULT drives some actuators apart from the ECMs and also shifts some parameters in a specified range.	×	—	×	—
ECM part number	ECM part number can be read.	×	—	×	—
Function test	Conducted by CONSULT instead of a technician to determine whether each system is "OK" or "NG".	×	—	—	—
Control unit initialisation	All registered ignition key IDs in NATS components can be initialised and new IDs can be registered.	—	—	—	×
Self-function check	ECM checks its own NATS communication interface.	—	—	—	×

×: Applicable
*1: NATS: Nissan Anti-Theft System

Lithium Battery Replacement

CONSULT contains a lithium battery. When replacing the battery obey the following:

WARNING:

Replace the lithium battery with SANYO Electric Co., Ltd., CR2032 only. Use of another battery may present a risk of fire or explosion. The battery may present a fire or chemical burn hazard if mistreated. Do not recharge, disassemble or dispose of in fire.

Keep the battery out of reach of children and discard used battery conforming to the local regulations.

Checking Equipment

When ordering the below equipment, contact your NISSAN distributor.

Tool name	Description
NISSAN CONSULT ① CONSULT unit and accessories ② Program card (EE 940) (AE930)*1, (AE950)*2, (NATS-E940)*3	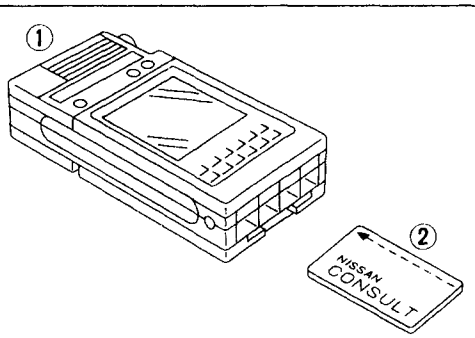 NT004

*1: For Australia
*2: Regarding ABS for Australia, a revised program card (AE950) will be applicable to this system in 1995.
*3: An order for NATS program card must be placed only with NISSAN EUROPE N.V.

Model Variation

For Europe LHD

		Europe LHD			
Engine		GA14DE	GA16DE		CD20
Transaxle		5F	5F	AT	5F
		RS5F30A	RS5F31A	RL4F03A	RS5F31A
4-door Sedan	L	BAVALBF-EGA			
	LX	BAVALDF-EGA	BAYALDF-EGA	BAYALDA-EGA	BVCALDF-NGA
	SLX	BAVALFF-EGA	BAYALFF-EGA	BAYALFA-EGA	BVCALFF-NGA
	SR		BAYALQF-EGA		
3-door Hatchback	L	EAVALBF-EGA			
	LX	EAVALDF-EGA	EAYALDF-EGA	EAYALDA-EGA	EVCALDF-NGA
	SLX	EAVALFF-EGA	EAYALFF-EGA	EAYALFA-EGA	EVCALFF-NGA
	SR	EAVALQF-EGA	EAYALQF-EGA		
	GTI				
5-door Hatchback	L	FAVALBF-EGA			
	LX	FAVALDF-EGA	FAYALDF-EGA	FAYALDA-EGA	FVCALDF-NGA
	SLX	FAVALFF-EGA	FAYALFF-EGA	FAYALFA-EGA	FVCALFF-NGA
	SR	FAVALQF-EGA	FAYALQF-EGA		

For Europe RHD

		Europe RHD			
Engine		GA14DE	GA16DE		CD20
Transaxle		5F	5F	AT	5F
		RS5F30A	RS5F31A	RL4F03A	RS5F31A
4-door Sedan	L	BAVARBF-EEA			
	LX	BAVARDF-EEA	BAYARDF-EEA	BAYARDA-EEA	BVCARDF-NEA
	SLX	BAVARFF-EEA	BAYARFF-EEA	BAYARFA-EEA	BVCARFF-NEA
	SR		BAYARQF-EEA		
3-door Hatchback	L	EAVARBF-EEA			
	LX	EAVARDF-EEA			
	SLX	EAVARFF-EEA	EAYARFF-EEA	EAYARFA-EEA	
	SR	EAVARQF-EEA	EAYARQF-EEA		
	GTI				
5-door Hatchback	L	FAVARBF-EEA			
	LX	FAVARDF-EEA	FAYARDF-EEA	FAYARDA-EEA	FVCARDF-NEA
	SLX	FAVARFF-EEA	FAYARFF-EEA	FAYARFA-EEA	FVCARFF-NEA
	SR	FAVARQF-EEA	FAYARQF-EEA		

Model Variation (Cont'd)

For Australia

		Australia			
Engine		GA16DE		SR20DE	
Transaxle		5F RS5F31A	4AT RL4F03A	5F RS5F32A	4AT RL4F03A
4-door Sedan	LX	BAYARDF-EMA	BAYARDA-EMA		
	SLX	BAYARFF-EMA	BAYARFA-EMA		
5-door Hatchback	LX	FAYARDF-EMA	FAYARDA-EMA		
	Q	FAYARDF-EMA	FAYARDA-EMA		
	SLX	FAYARFF-EMA	FAYARFA-EMA		
	SSS			FBYARUF-EMA	FBYARUA-EMA

Except Europe and Australia

		RHD Except Europe and Australia			
Engine		GA15DE		GA16DE	
Transaxle		5F RS5F30A	4AT RL4F03A	5F RS5F31A	4AT RL4F03A
4-door Sedan	LX	BAWARCF-EWA	BAWARCA-EWA		
	SLX			BAYARGF-EWA	BAYARGA-EWA
5-door Hatchback	XI	FAWARCF-EWA	FAWARCA-EWA		
	XIR			FAYARGF-EWA	FAYARGA-EWA

Model Variation (Cont'd)

Prefix and suffix designations:

B AV A L B F N15 E G A

A: Standard

E: RHD models for Europe
G: LHD models for Europe
W: RHD models except Europe and Australia
M: Australia

E: Multiport fuel injection system engine
N: Diesel engine

Model

A: 4-speed automatic transaxle
F: 5-speed manual transaxle

B: L
D: LX or Q
F: SLX
Q: SR
U: GTI or SSS

C: LX or XI
G: SLX or XIR

L: Left-hand drive
R: Right-hand drive

A: 2-wheel drive models

AV: GA14DE engine
AW: GA15DE engine
AY: GA16DE engine
BY: SR20DE engine
VC: CD20 engine

B: 4-door Sedan
F: 5-door Hatchback
E: 3-door Hatchback

Identification Number

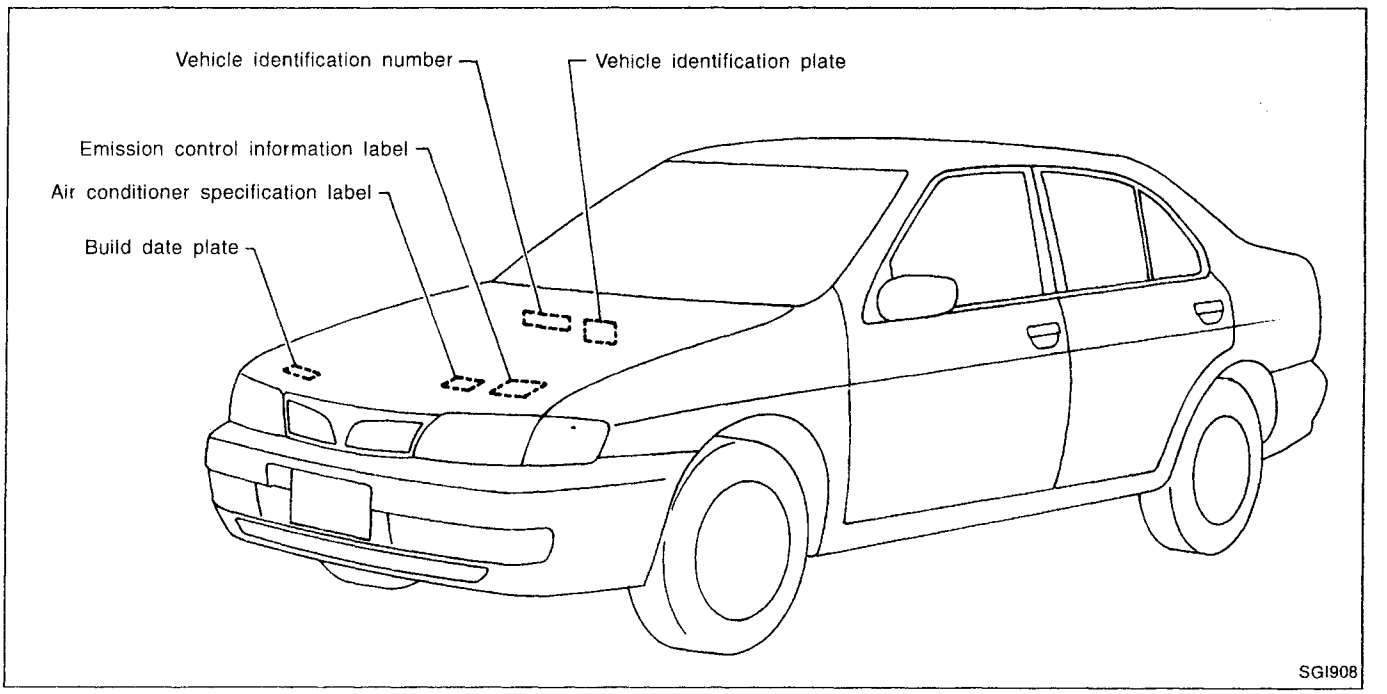

VEHICLE IDENTIFICATION NUMBER ARRANGEMENT

For Europe

JN1 B A A N15 U 0 XXXXXX

Vehicle serial number

0 : Stopgap (no meaning)

Destination
U : Europe

Model
A : 2-wheel drive

Engine type
A : GA14DE engine
C : GA16DE engine
E : SR20DE engine
F : CD20 engine

Body type
B : 4-door Sedan
F : 5-door Hatchback
E : 3-door Hatchback

Manufacturer
JN1 : Nissan, Passenger vehicle

Identification Number (Cont'd)

For Australia and New Zealand

JN1 B C A N15 A 0 XXXXXX

- XXXXXX: Vehicle serial number
- 0: 0 : Stopgap (no meaning)
- A: Destination
  A : Australia and New Zealand
- N15: Model
- A: A : 2-wheel drive
- C: Engine type
  B : GA15DE engine
  C : GA16DE engine
  E : SR20DE engine
- B: Body type
  B : 4-door Sedan
  F : 5-door Hatchback
- JN1: Manufacturer
  JN1 : Nissan, Passenger vehicle

Except for Europe, Australia, New Zealand

JN1 B C A N15 Z 0 XXXXXX

- XXXXXX: Vehicle serial number
- 0: 0 : Stopgap (no meaning)
- Z: Destination
  Z : Except Europe, Australia, New Zealand
- N15: Model
- A: A : 2-wheel drive
- C: Engine type
  B : GA15DE engine
  C : GA16DE engine
- B: Body type
  B : 4-door Sedan
  F : 5-door Hatchback
- JN1: Manufacturer
  JN1 : Nissan, Passenger vehicle

IDENTIFICATION PLATE

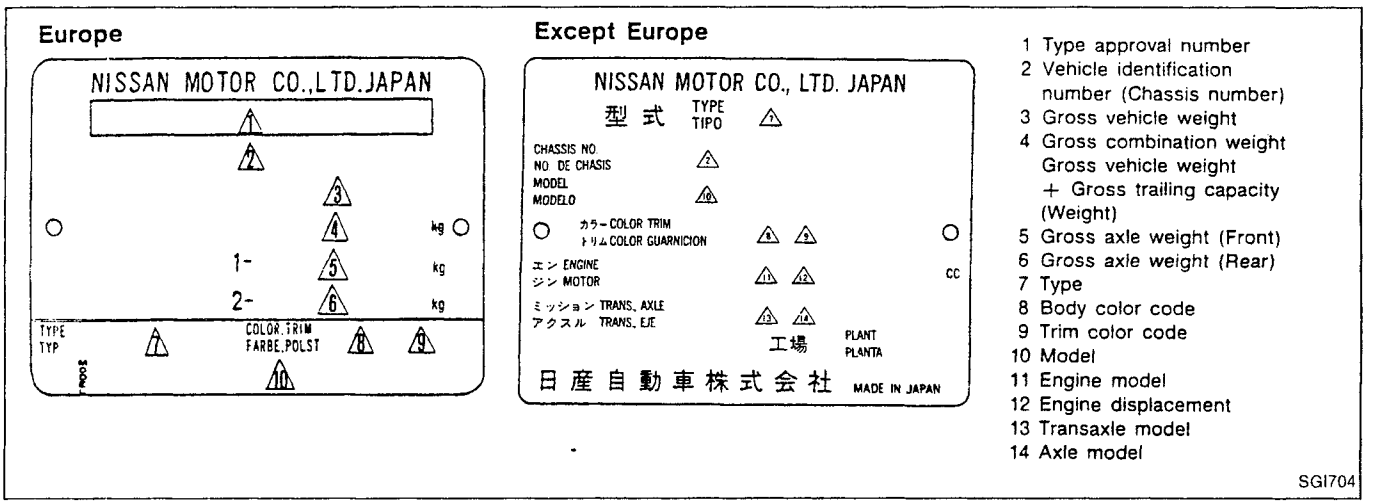

ENGINE SERIAL NUMBER

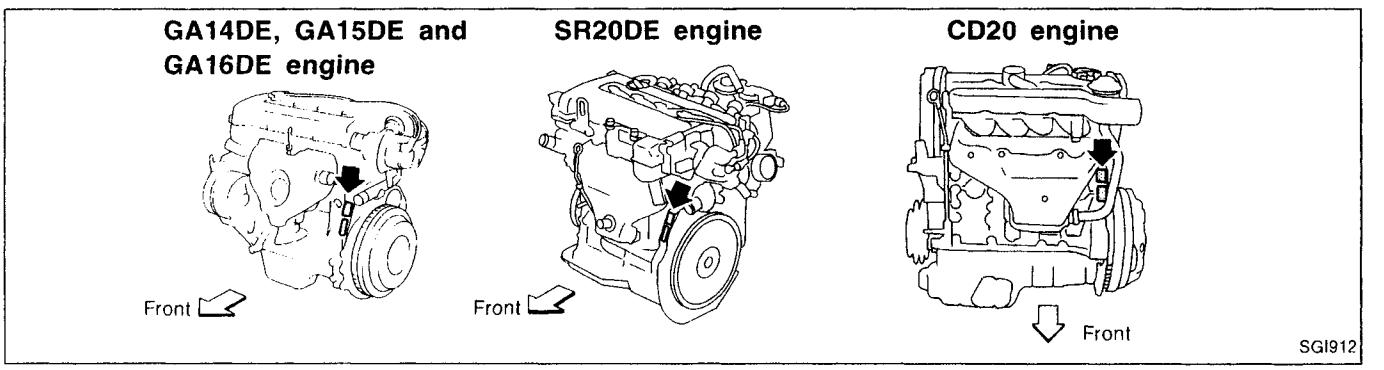

MANUAL TRANSAXLE NUMBER

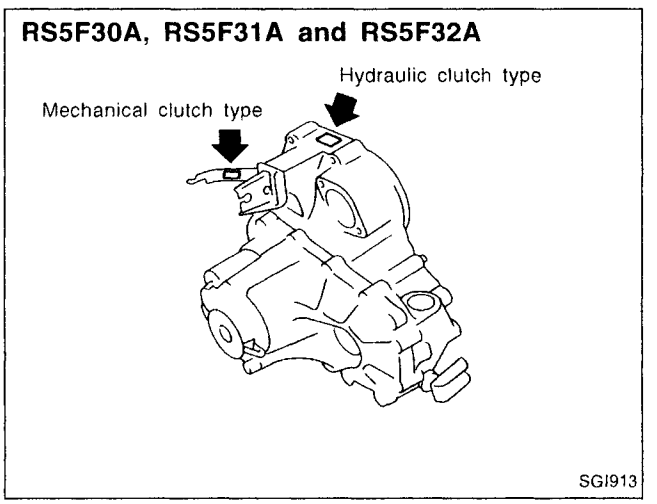

AUTOMATIC TRANSAXLE NUMBER

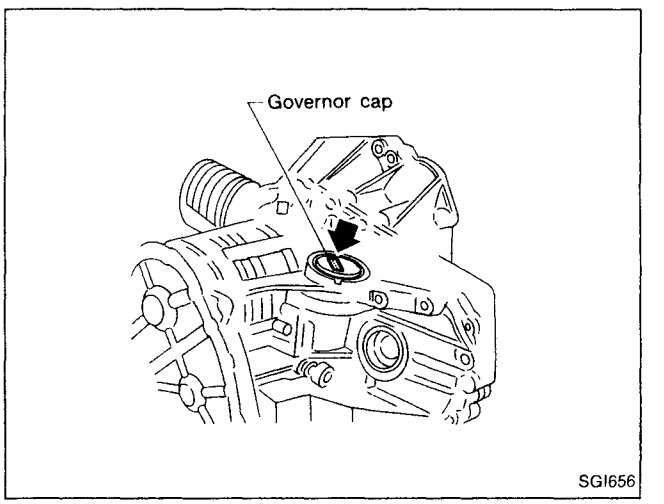

Dimensions

Unit: mm (in)

	Sedan	Hatchback
Overall length	4,320 (170.1)	4,120 (162.2)
Overall width	1,690 (66.5)	←
Overall height	1,395 (54.9)	←
Front tread	1,480 (58.3)*1 1,470 (57.9)*2	←
Rear tread	1,445 (56.9)*1 1,435 (56.5)*2	←
Wheelbase	2,535 (99.8)	←

*1: For models with 13-inch road wheels
*2: For models with 14-inch or 15-inch road wheels

Wheels and Tires

Road wheel	Steel	13 x 5J	14 x 5-1/2JJ	—
	Offset mm (in)	35 (1.38)	40 (1.57)	
	Aluminum	13 x 5J	14 x 5-1/2JJ	15 x 6J
	Offset mm (in)	35 (1.38)	40 (1.57)	40 (1.57)
Tire size	Conventional	175/70R13 82S 165SR13	175/65R14 82H 185/65R14 86H	195/55R15 84V
	Spare	Conventional	Conventional	Conventional

Preparation

SPECIAL SERVICE TOOLS

Tool number Tool name	Description
LM4086-0200 Board on attachment	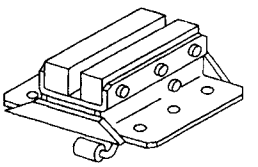 NT001
LM4519-0000 Safety stand attachment	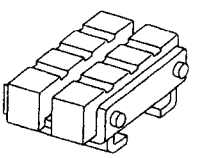 NT002

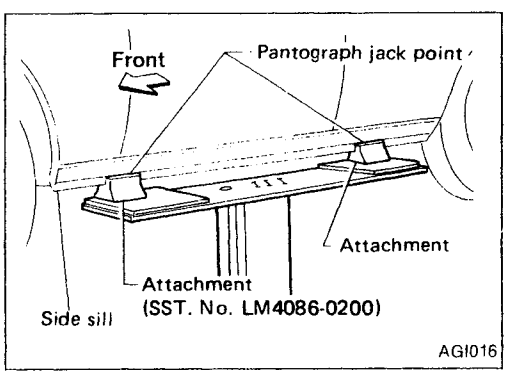

Board-on Lift

CAUTION:

Make sure vehicle is empty when lifting.

- **The board-on lift attachment (LM4086-0200) set at front end of vehicle should be set on the front of the sill under the front door opening.**
- **Position attachments at front and rear ends of board-on lift.**

Garage Jack and Safety Stand

WARNING:

- **Never get under the vehicle while it is supported only by the jack. Always use safety stands when you have to get under the vehicle.**
- **Place wheel chocks at both front and back of the wheels on the ground.**

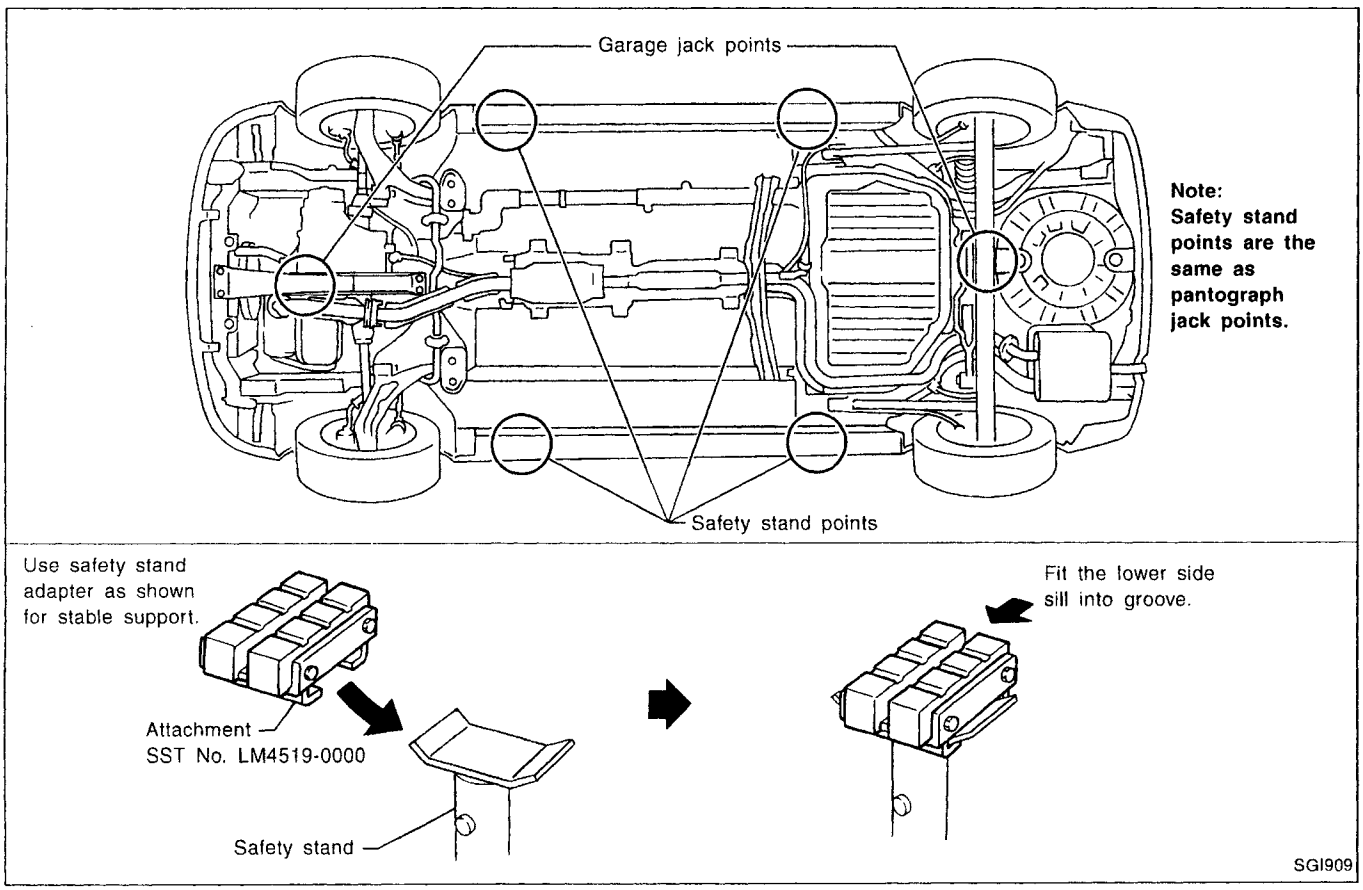

2-pole Lift

WARNING:
When lifting the vehicle, open the lift arms as wide as possible and ensure that the front and rear of the vehicle are well balanced.
When setting the lift arm, do not allow the arm to contact the brake tubes and fuel lines.

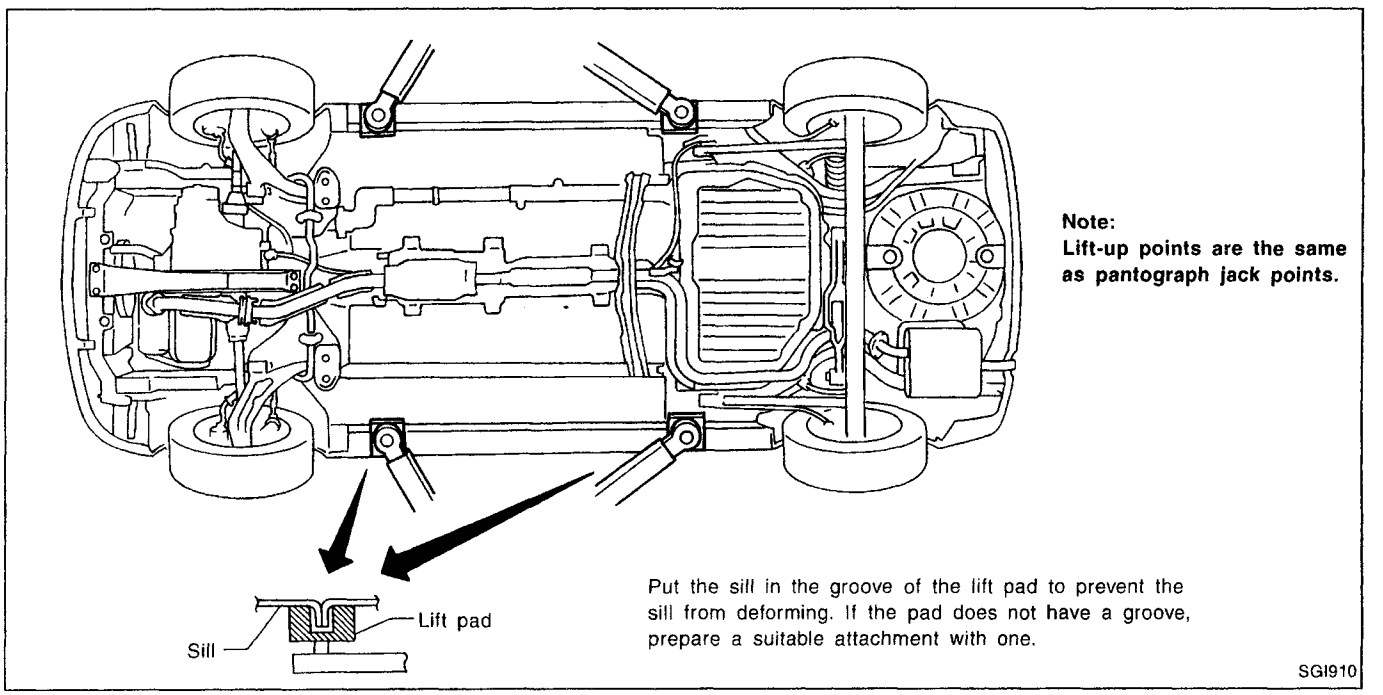

Tow Truck Towing

CAUTION:

- **All applicable local laws regarding the towing operation must be obeyed.**
- **It is necessary to use proper towing equipment to avoid possible damage to the vehicle during towing operation. Towing is in accordance with Towing Procedure Manual at dealer.**
- **When towing with the rear wheels on the ground, release the parking brake and move the gearshift lever to neutral position.**

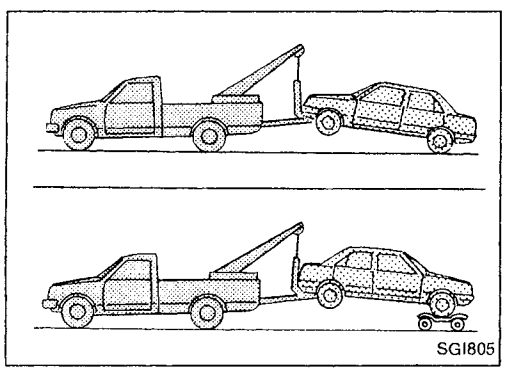
SGI805

NISSAN recommends that vehicle be towed with the driving (front) wheels off the ground as illustrated.

TOWING AN AUTOMATIC TRANSAXLE MODEL WITH FOUR WHEELS ON GROUND

Observe the following restricted towing speeds and distances.

Speed:
Below 50 km/h (30 MPH)
Distance:
Less than 65 km (40 miles)

CAUTION:
Never tow an automatic transaxle model from the rear (i.e., backward) with four wheels on the ground as this may cause serious and expensive damage to the transaxle.

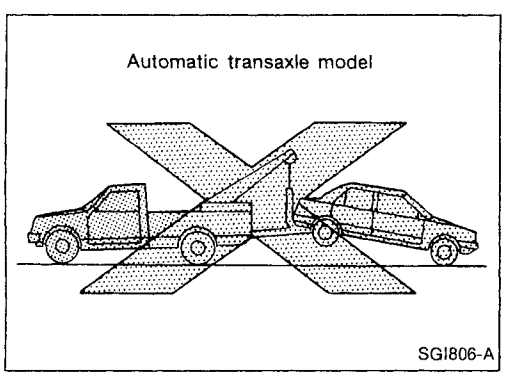

SGI806-A

TOWING AN AUTOMATIC TRANSAXLE MODEL WITH REAR WHEELS RAISED (With front wheels on ground)

Never tow an automatic transaxle model with rear wheels raised (with front wheels on ground) as this may cause serious and expensive damage to the transaxle. If it is necessary to tow it with rear wheels raised, always use a towing dolly under the front wheels.

TOWING POINT

Always pull the cable straight out from the vehicle. Never pull on the hook at a sideways angle.

CAUTION:
Remove the front spoiler when towing the vehicle forward. Otherwise, the towing device may damage the front spoiler.

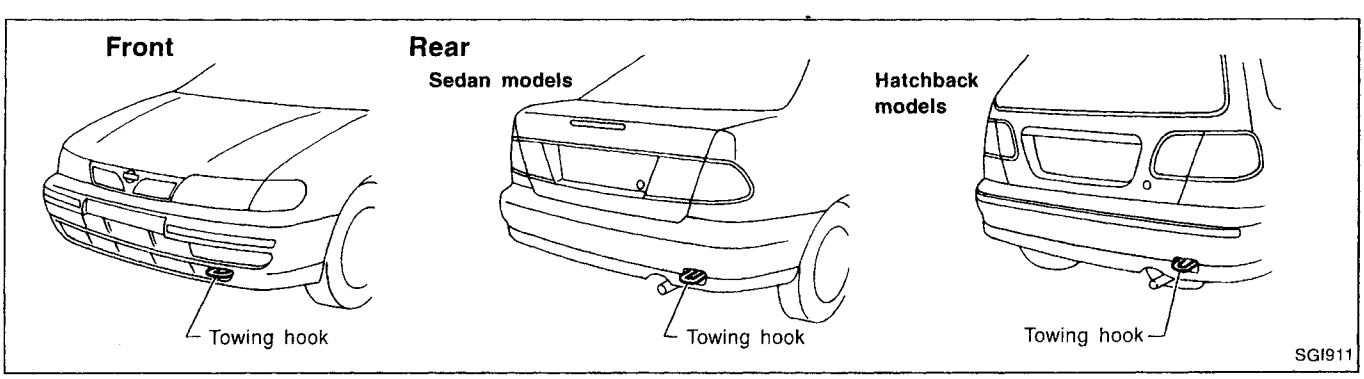

SGI911

TIGHTENING TORQUE OF STANDARD BOLTS

Grade	Bolt size	Bolt diameter* mm	Pitch mm	Tightening torque (Without lubricant)							
				Hexagon head bolt				Hexagon flange bolt			
				N·m	kg-m	ft-lb	in-lb	N·m	kg-m	ft-lb	in-lb
4T	M6	6.0	1.0	5.1	0.52	3.8	45.1	6.1	0.62	4.5	53.8
	M8	8.0	1.25	13	1.3	9	—	15	1.5	11	—
			1.0	13	1.3	9	—	16	1.6	12	—
	M10	10.0	1.5	25	2.5	18	—	29	3.0	22	—
			1.25	25	2.6	19	—	30	3.1	22	—
	M12	12.0	1.75	42	4.3	31	—	51	5.2	38	—
			1.25	46	4.7	34	—	56	5.7	41	—
	M14	14.0	1.5	74	7.5	54	—	88	9.0	65	—
7T	M6	6.0	1.0	8.4	0.86	6.2	74.6	10	1.0	7	87
	M8	8.0	1.25	21	2.1	15	—	25	2.5	18	—
			1.0	22	2.2	16	—	26	2.7	20	—
	M10	10.0	1.5	41	4.2	30	—	48	4.9	35	—
			1.25	43	4.4	32	—	51	5.2	38	—
	M12	12.0	1.75	71	7.2	52	—	84	8.6	62	—
			1.25	77	7.9	57	—	92	9.4	68	—
	M14	14.0	1.5	127	13.0	94	—	147	15.0	108	—
9T	M6	6.0	1.0	12	1.2	9	—	15	1.5	11	—
	M8	8.0	1.25	29	3.0	22	—	35	3.6	26	—
			1.0	31	3.2	23	—	37	3.8	27	—
	M10	10.0	1.5	59	6.0	43	—	70	7.1	51	—
			1.25	62	6.3	46	—	74	7.5	54	—
	M12	12.0	1.75	98	10.0	72	—	118	12.0	87	—
			1.25	108	11.0	80	—	137	14.0	101	—
	M14	14.0	1.5	177	18.0	130	—	206	21.0	152	—

1. **Special parts are excluded.**
2. **This standard is applicable to bolts having the following marks embossed on the bolt head.**

*: Nominal diameter

Grade		Mark
4T	.....	4
7T	.....	7
9T	.....	9

M — Metric screw threads

6 — Nominal diameter of bolt threads (Unit: mm)

SAE J1930 Terminology List

All emission related terms used in this publication in accordance with SAE J1930 are listed. Accordingly, new terms, new acronyms/abbreviations and old terms are listed in the following chart.

***: Not applicable

NEW TERM	NEW ACRONYM / ABBREVIATION	OLD TERM
Absolute pressure sensor	***	***
Air cleaner	ACL	Air cleaner
Barometric pressure	BARO	***
Barometric pressure sensor-BCDD	BAROS-BCDD	BCDD
Camshaft position	CMP	***
Camshaft position sensor	CMPS	Crank angle sensor
Carburetor	CARB	Carburetor
Charge air cooler	CAC	Intercooler
Closed loop	CL	Closed loop
Closed throttle position switch	CTP switch	Idle switch
Clutch pedal position switch	CPP switch	Clutch switch
Continuous fuel injection system	CFI system	***
Continuous trap oxidizer system	CTOX system	***
Crankshaft position	CKP	***
Crankshaft position sensor	CKPS	***
Data link connector	DLC	***
Data link connector for CONSULT	DLC for CONSULT	Diagnostic connector for CONSULT
Diagnostic test mode	DTM	Diagnostic mode
Diagnostic test mode selector	DTM selector	Diagnostic mode selector
Diagnostic test mode I	DTM I	Mode I
Diagnostic test mode II	DTM II	Mode II
Diagnostic trouble code	DTC	Malfunction code
Direct fuel injection system	DFI system	***
Distributor ignition system	DI system	Ignition timing control
Early fuel evaporation-mixture heater	EFE-mixture heater	Mixture heater
Early fuel evaporation system	EFE system	Mixture heater control
Electrically erasable programmable read only memory	EEPROM	***
Electronic ignition system	EI system	Ignition timing control
Engine control module	ECM	ECCS control unit
Engine coolant temperature	ECT	Engine temperature
Engine coolant temperature sensor	ECTS	Engine temperature sensor
Engine modification	EM	***
Engine speed	RPM	Engine speed
Erasable programmable read only memory	EPROM	***
Evaporative emission canister or Canister	EVAP canister or Canister	Canister
Evaporative emission canister purge control solenoid valve	EVAP canister purge control solenoid valve	Canister control solenoid valve

SAE J1930 Terminology List (Cont'd)

***: Not applicable

NEW TERM	NEW ACRONYM / ABBREVIATION	OLD TERM
Evaporative emission canister purge control valve	EVAP canister purge control valve	Canister purge cut valve
Evaporative emission canister vent control valve	EVAP canister vent control valve	***
Evaporative emission canister purge volume control valve	EVAP canister purge volume control valve	Canister purge control valve
Evaporative emission control system pressure sensor	EVAP control system pressure sensor	***
Evaporative emission shut valve	EVAP shut valve	Shutoff valve
Evaporative emission system	EVAP system	Evaporative emission control system
Exhaust gas recirculation valve	EGR valve	EGR valve
Exhaust gas recirculation control-BPT valve	EGRC-BPT valve	BPT valve
Exhaust gas recirculation control-solenoid valve	EGRC-solenoid valve	EGR control solenoid valve
Exhaust gas recirculation temperature sensor	EGR temperature sensor	Exhaust gas temperature sensor
Flash electrically erasable programmable read only memory	FEEPROM	***
Flash erasable programmable read only memory	FEPROM	***
Flexible fuel sensor	FFS	***
Flexible fuel system	FF system	***
Heated Oxygen sensor	HO2S	Exhaust gas sensor
Idle air control system	IAC system	Idle speed control
Idle air control valve-air regulator	IACV-air regulator	Air regulator
Idle air control valve-auxiliary air control valve	IACV-AAC valve	Auxiliary air control (AAC) valve
Idle air control valve-FICD solenoid valve	IACV-FICD solenoid valve	FICD solenoid valve
Idle air control valve-idle up control solenoid valve	IACV-idle up control solenoid valve	Idle up control solenoid valve
Idle speed control-FI pot	ISC-FI pot	FI pot
Idle speed control system	ISC system	***
Ignition control module	ICM	***
Indirect fuel injection system	IFI system	***
Intake air temperature sensor	IATS	Air temperature sensor
Knock	***	Detonation
Knock sensor	KS	Detonation sensor
Malfunction indicator lamp	MIL	Check engine light
Manifold absolute pressure	MAP	***
Manifold absolute pressure/Barometric pressure switch solenoid valve	MAP/BARO switch solenoid valve	***
Manifold absolute pressure sensor	MAPS	***
Manifold differential pressure	MDP	***
Manifold differential pressure sensor	MDPS	***

SAE J1930 Terminology List (Cont'd)

***: Not applicable

NEW TERM	NEW ACRONYM / ABBREVIATION	OLD TERM
Manifold surface temperature	MST	***
Manifold surface temperature sensor	MSTS	***
Manifold vacuum zone	MVZ	***
Manifold vacuum zone sensor	MVZS	***
Mass air flow sensor	MAFS	Air flow meter
Mixture control solenoid valve	MC solenoid valve	Air-fuel ratio control solenoid valve
Multiport fuel injection System	MFI system	Fuel injection control
Neutral position switch	***	Neutral switch
Non-volatile random access memory	NVRAM	***
On-board diagnostic system	OBD system	Self-diagnosis
Open loop	OL	Open loop
Oxidation catalyst	OC	Catalyst
Oxidation catalytic converter system	OC system	***
Oxygen sensor	O2S	Exhaust gas sensor
Park position switch	***	Park switch
Park/neutral position switch	PNP switch	Park/neutral switch
Periodic trap oxidizer system	PTOX system	***
Powertrain control module	PCM	***
Programmable read only memory	PROM	***
Pulsed secondary air injection control solenoid valve	PAIRC solenoid valve	AIV control solenoid valve
Pulsed secondary air injection system	PAIR system	Air induction valve (AIV) control
Pulsed secondary air injection valve	PAIR valve	Air induction valve
Random access memory	RAM	***
Read only memory	ROM	***
Scan tool	ST	***
Secondary air injection pump	AIR pump	***
Secondary air injection system	AIR system	***
Sequential multiport fuel injection system	SFI system	Sequential fuel injection
Service reminder indicator	SRI	***
Simultaneous multiport fuel injection system	***	Simultaneous fuel injection
Smoke puff limiter system	SPL system	***
Supercharger	SC	***
Supercharger bypass	SCB	***
System readiness test	SRT	***
Tank fuel temperature sensor	***	***
Thermal vacuum valve	TVV	Thermal vacuum valve
Three way catalyst	TWC	Catalyst
Three way catalytic converter system	TWC system	***
Three way + oxidation catalyst	TWC + OC	Catalyst

SAE J1930 Terminology List (Cont'd)

***: Not applicable

NEW TERM	NEW ACRONYM / ABBREVIATION	OLD TERM
Three way + oxidation catalytic converter system	TWC + OC system	***
Throttle body	TB	Throttle chamber SPI body
Throttle body fuel injection system	TBI system	Fuel injection control
Throttle position	TP	Throttle position
Throttle position sensor	TPS	Throttle sensor
Throttle position switch	TP switch	Throttle switch
Torque converter clutch solenoid valve	TCC solenoid valve	Lock-up cancel solenoid Lock-up solenoid
Turbocharger	TC	Turbocharger
Vacuum cut valve	***	Vacuum control valve
Vacuum cut valve bypass valve	***	***
Vehicle speed sensor	VSS	Vehicle speed sensor
Volume air flow sensor	VAFS	Air flow meter
Warm up oxidation catalyst	WU-OC	Catalyst
Warm up oxidation catalytic converter system	WU-OC system	***
Warm up three way catalyst	WU-TWC	Catalyst
Warm up three way catalytic converter system	WU-TWC system	***
Wide open throttle position switch	WOTP switch	Full switch